REQUEST FOR BIDS

The City of Las Vegas, New Mexico will open Sealed Bids at 2:00 p.m., Nov 14th, 2018 at the City Council Chambers, 1700 North Grand Avenue, Las Vegas, New Mexico, or other designated area at the City Offices; ON THE FOLLOWING:

MILLS BUILDING REHAB PROJECT

The BIDDING FORMS AND TECHNICAL SPECIFICATIONS may be examined at the following location: ***City Clerk's Office at 1700 North Grand Avenue, Las Vegas, NM 87701***

Copies of the BIDDING FORMS AND TECHNICAL SPECIFICATIONS may be obtained at the office of : ***City Clerk's Office at 1700 North Grand Avenue, Las Vegas, NM 87701***

Mailed Bids should be addressed to the City Clerk, 1700 N. Grand Ave., Las Vegas, New Mexico 87701; with the envelope marked:MILLS BUILDING REHAB PROJECT, Opening No. 2019-5; on the lower left-hand corner of the submitted envelope. It shall be the responsibility of the bidder to see that their bid is delivered to the **City Clerk** by the date and time set for the bid request. If the mail or delivery of bid request is delayed beyond the opening date and time, bid thus delayed will not be considered. A public opening will be held and any bidder or their authorized representative is invited to attend.

The City of Las Vegas reserves the right to reject any/or all bids submitted.

CITY OF LAS VEGAS,

INTERIM, CITY MANAGER Ann Marie Gallegos

INTERIM, CITY ATTORNEY

CASANDRA FRESQUEZ, CITY CLERK

INTERIM, FINANCE DIRECTOR.Tana Vega.

HELEN VIGIL, PURCHASING OFFICER

Opening No. 2019- 05 Date Issued: 10/10, 2018

Date Issued: Published: Las Vegas Optic Oct 13, 2018
City website: www.lasvegasnm.gov Oct 13, 2018
Albuquerque Journal Oct 13, 2018

BIDDER INFORMATION

BIDDER: _____

AUTHORIZED AGENT: _____

ADDRESS: _____

TELEPHONE NUMBER ()_____

FAX NUMBER ()_____

DELIVERY: _____

STATE PURCHASING RESIDENT CERTIFICATION NO.: _____

NEW MEXICO CONTRACTORS LICENSE NO.: _____

BID ITEM (S): *MILLS BUILDING REHAB PROJECT..*

ITEM (S) UNDER THIS BID ARE TO BE F.O.B. LAS VEGAS, NEW MEXICO 87701. THE CITY OF LAS VEGAS RESERVES THE RIGHT REJECT ANY OR ALL BIDS AND TO WAIVE ANY TECHINCAL IRREGULARITY IN THE FORM OF THE BID.

AFFIDAVIT FOR FILING WITH COMPETITIVE BID

STATE OF}

}

COUNTY OF }

I , of lawful age, being of first duly sworn in oath, say that I am the agent authorized by the bidder to submit the attached bid. Affiant further states that the bidder has not been a party to any collusion among bidders in restraint of freedom of competition by agreement to bid at a fixed price or to refrain from bidding; or with any city official or employee as to the terms of said prospective contract, or any other terms of said prospective contract; or in any discussion between bidders with any city official concerning an exchange of money or any other thing of value for special consideration in the letting of a contract.

_____
Signature

Subscribed and sworn to before me, this ___ day of _____, 20_____.

(SEAL)

_____
Notary Public Signature
My Commission Expires: _____

STANDARD BID CLAUSES

AWARDED BID

Awarding of Bid shall be made to the responsible Bidder whose Bid meets the required specifications. The City of Las Vegas (City) reserves the right to reject or accept any of all Bid specifications and to waive any insubstantial irregularity in the form of the Bid.

TIMETABLE

Bid pursuant to this request must be received at the City Clerk's Office at 1700 North Grand Avenue. Las Vegas, New Mexico, on or before Nov 14th , ***2018*** at 2:00 p.m., at which time all bids received will be opened. An opening will occur at the City's Council Chambers or other designated area at the City Offices. Awarding of Bid is projected for _____ ***2018.*** The successful Bidder will be notified by mail.

ENVELOPES

Sealed Bid envelopes shall be clearly marked on the lower left-hand corner, identified by the Bid Name and Opening Number. Failure to comply with this requirement may result in the rejection of your submitted Bid.

BRIBERY AND KICKBACK

The Procurement Code of New Mexico; (Section 13-1-28 through 13-1-99 N.M.S.A. 1978), impose a third degree felony penalty for bribery of a public official or public employee. In addition the New Mexico Criminal Statutes (Section 30-4-1, N.M.S.A. 1978): state that it is a third degree felony to commit the offense of demanding or receiving a bribe by a public official of public employee. And (Section 30-24-2, N.M.S.A. 1978): it is a fourth degree felony to commit the offense of soliciting or receiving illegal kickbacks. Also (Section 30-41-1 through 30-41-3, N.M.S.A. 1978): states that it is a fourth degree felony to commit the offense of offering or paying illegal kickbacks.

NON-COLLUSION

In signing their Bid and Affidavit, the Bidder certifies that he/she has not, either directly or indirectly entered into action of restraint of free competition, in the connection with the submitted bid.

RESPONSIBILITY OF BIDDER

At all times it shall be the responsibility of the Bidder to see their bid is delivered to the City Clerk by the Date and Time scheduled for opening. If the mail or delivery of said Bid is delayed beyond the scheduled opening date and time set, this bid will not be considered.

CLARIFICATION OF BID

Bidder requiring clarification or interpretation of Bid specifications shall make a written request to the Department involved in this bid request at least five (5) days prior to the scheduled bid opening date with a copy forwarded to the Finance Department. Any interpretation, corrections or changes of said Bid Specifications, Opening Date, or Time Change will be made by Addendum only. Interpretations, Corrections or changes of said bid made in any other manner will not be binding and the Bidder shall not rely upon such interpretation, corrections and changes.

MODIFICATION OF BID

Bids may be withdrawn upon receipt of written request prior to the scheduled bid opening for the purpose of making any corrections or changes. Such corrections must be properly identified and signed or initialed by the Bidder. Resubmission must be prior to the scheduled bid opening time in order to be considered. After bid opening, no price modifications of submitted bids or other provisions shall be permitted.

WITHDRAWAL OF BID

A low Bidder alleging a material mistake of fact, after bids have been opened may request their bid be withdrawn upon receipt of a written request to the Finance Department prior to the scheduled awarding date.

INSPECTION

Final inspection and acceptance will be made at the City's discretion. Products rejected for nonconformance with the specifications shall be removed by the Bidder; at his/her risk and expense promptly after notice of rejection.

FEDERAL TAX IDENTIFICATION NUMBER

Pursuant to IRS requirements, Bidder shall provide their Federal Tax ID Number if Bidder is incorporated. If Bidder is a sole proprietorship or partnership then they shall provide their Social Security Number.
FEDERAL TAX ID NUMBER:
SOCIAL SECURITY NUMBER:

NEW MEXICO TAX IDENTIFICATION NUMBER

Payment may be withheld under (Section 7-10-5, N.M.S.A. 1978) if you are subject to New Mexico Gross Receipts Tax and have not registered for a New Mexico (CRS) Tax Identification Number. Contact the New Mexico Taxation & Revenue Department at (505) 827-0700 for registering instructions.

NEW MEXICO TAX IDENTIFICATION NO. (CRS):_____

CAMPAIGN CONTRIBUTION DISCLOSURE FORM

The Bidder shall submit a completed Campaign Contribution Disclosure Form Pursuant to Chapter 81, Laws of2006.

COMMERCIAL WARRANTY

The Bidder agrees that the products or services furnished under a Purchase Order shall be covered by the most favorable commercial warranties that the Bidder gives to any customer for such products or services. And that the rights and remedies provided therein shall extend to the City and are in addition to and do not limit any rights afforded to the City by any other clause of its Purchase Order. Bidder agrees not to disclaim warranties of fitness for any particular purpose or merchantability.

Furthermore, Bidder agrees that its warranty for all products furnished under a Purchase Order pursuant to this Call for Bids shall be for a period of one year following the installation of said products by others. Also a receipt of a notice by the City's Engineer the products have been installed correctly and have been demonstrated to be capable of performing their intended function.

SPECIAL NOTICE

To preclude possible errors and/or misinterpretations, bid prices must be affixed in ink or typewritten legibly. *Enclose one (1) original and Four (4) copies of Bid documents.*

DEFAULT

The City reserves the right to cancel all or any part of an order without cost to the City if the Bidder fails to meet the provisions of the City's Purchase Order or the product specifications and to hold the Bidder liable for any excess costs occasioned due to the Bidder's default. The Bidder shall not be liable for any excess costs if failure to perform on an order arises out of cause beyond the control and without fault or negligence of the Bidder. Such causes include, but are not restricted to, acts of God or public enemy; acts of State or Federal Government; fires, floods, epidemics, quarantine restrictions, strikes, embargoes, unusually severe weather, or defaults of subcontractors. Due to any of the above unless the City shall determine that the supplies or services to be furnished by the subcontractor are obtainable from other sources in the City in this paragraph shall not be exclusive and are in addition to any other rights now being provided by law.

BID PROTESTS

If any Bidder is of the opinion that the specifications as written preclude him/her from submitting a bid. His/her opinion should be made known to the Department involved in this bid request at least twelve (15) days prior to the scheduled bid opening date with a copy forwarded to the Finance Department. Bid protests will not be considered from parties which do not also furnish satisfactory documentation with their protest that their proposed system fully meets the functional intent of the TECHNICAL SPECIFICATIONS which accompany a Call for Bids.

NON-EXCLUSION

Specifications of the bid request are not meant to exclude any Bidder or Manufacturer. Where a brand name or equal is indicated, it is for the purpose of describing the standard of quality, performance and characteristics desired and is not intended to restrict competition. "No Substitute" specifications may be authorized, only if required to match existing equipment.

If any Bidder is of the opinion that the specifications as written preclude him/her from submitting a bid. His/her opinion should be made known to the Department involved in this bid request at least five (5) days prior to the scheduled bid opening date; with a copy forwarded to the Finance Department.

Brand names and numbers are for reference only and equivalents will be considered. If bidding "EQUIVALENT" Bidder must be prepared to furnish complete data upon request, preferably with the bid to avoid awarding delay.

CONTRACT

When the City issues a Purchase Order in response to an awarded Bid a binding contract is created (unless a specified contract has been created).

TERMINATION

This Price Agreement may be terminated by either party upon signing a written notice to the other party at least thirty (30) days in advance of the date of termination. Notice of termination of this Price Agreement shall not affect any outstanding orders.

TAXES

Bidder must pay all applicable taxes.

NOTE:

If bidder is from outside the City of Las Vegas, the successful bidder must pay Gross Receipts in the City of Las Vegas.

CITY OF LAS VEGAS
BIDFORM

BID ITEM (S): MILLS BUILDING REHAB PROJECT.

A. _____ $ _____

B. _____ $ _____

C. _____ $ _____

D. _____ $ _____

E. _____ $ _____

F. _____ $ _____

G. _____ $ _____

F. _____ $ _____

G. _____ $ _____

H. _____ $ _____

I. _____ $ _____

J. _____ $ _____

K. _____ $ _____

L. _____ $ _____

NOTE: _____

_____

_____

_____

_____.

CAMPAIGN CONTRIBUTION DISCLOSURE FORM

Pursuant to Chapter 81, Laws of 2006, any prospective contractor seeking to enter into a contract with any state agency or local public body must file this form with that state agency or local public body. The prospective contractor must disclose whether they, a family member or a representative of the prospective contractor has made a campaign contribution to an applicable public official of the state or a local public body during the two years prior to the date on which the contractor submits a proposal or, in the case of a sole source or small purchase contract, the two years prior to the date the contractor signs the contract, if the aggregate total of contributions given by the prospective contractor, a family member or a representative of the prospective contractor to the public official exceeds two hundred and fifty dollars ($250) over the two year period.

THIS FORM MUST BE FILED BY ANY PROSPECTIVE CONTRACTOR WHETHER OR NOT THEY, THEIR FAMIL Y MEMBER, OR THEIR REPRESENTATIVE HAS MADE ANY CONTRIBUTIONS SUBJECT TO DISCLOSURE.

The following definitions apply:

"Applicable public official" means a person elected to an office or a person appointed to complete a term of an elected office, who has the authority to award or influence the award of the contract for which the prospective contractor is submitting a competitive sealed proposal or who has the authority to negotiate a sole source or small purchase contract that may be awarded without submission of a sealed competitive proposal.

"Campaign Contribution" means a gift, subscription, loan, advance or deposit of money or other thing of value, including the estimated value of an in-kind contribution, that is made to or received by an applicable public official or any person authorized to raise, collect or expend contributions on that official's behalf for the purpose of electing the official to either statewide or local office. "Campaign Contribution" includes the payment of a debt incurred in an election campaign, but does not include the value of services provided without compensation or unreimbursed travel or other personal expenses of individuals who volunteer a portion or all of their time on behalf of a candidate or political committee, nor does it include the administrative or solicitation expenses of a political committee that are paid by an organization that sponsors the committee.

"Contract" means any agreement for the procurement of items of tangible personal property, services, professional services, or construction.

"Family member" means spouse, father, mother, child, father-in-law, mother-in-law, daughter-in-law or son-in-law.

"Pendency of the procurement process" means the time period commencing with the public notice of the request for proposals and ending with the award of the contract or the cancellation of the request for proposals.

"Person" means any corporation, partnership, individual, joint venture, association or any other private legal entity.

"Prospective contractor" means a person who is subject to the competitive sealed

proposal process set forth in the Procurement Code or is not required to submit a competitive sealed proposal because that person qualifies for a sole source or a small purchase contract.

"Representative of a prospective contractor" means an officer or director of a corporation, a member or manager of a limited liability corporation, a partner of a partnership or a trustee of a trust of the prospective contractor.

DISCLOSURE OF CONTRIBUTIONS:

Contribution Made By: _____

Relation to Prospective Contractor: _____

Name of Applicable Public Official: _____

Date Contribution(s) Made: _____

Amount(s) ofContribution(s) _____

Nature ofContribution(s) _____

Purpose of Contribution(s) _____

(The above fields are unlimited in size) _____

_____ _____
Signature Date

_____
Title (position)

-OR-

NO CONTRIBUTIONS IN THE AGGREGATE TOTAL OVER TWO HUNDRED FIFTY DOLLARS ($250) WERE MADE to an applicable public official by me, a family member or representative.

_____ _____
Signature Date

_____
Title (Position)

DESIGN SPECIFICATIONS

Utilities Office Building Renovation Phase I

1401 1st Street, Las Vegas, NM 87701

Contract No.: _____

Prepared for:

City of Las Vegas
Utilities Department
Las Vegas, NM

Prepared By:

WHPacific, Inc
6501 Americas Parkway NE, #400
Albuquerque, NM 87110

October 8, 2018

SPECIFICATIONS
Table of Contents

Section No.	Title
DIVISION 1 GENERAL REQUIREMENTS	
011000	Summary
012000	Price and Payment Procedures
012500	Substitution Procedures
013000	Administrative Requirements
015000	Temporary Facilities and Controls
017000	Execution and Closeout Requirements
017419	Construction Waste Management and Disposal
017800	Closeout Submittals
017900	Demonstration and Training
DIVISION 2 EXISTING CONDITIONS	
024100	Demolition
DIVISION 4 MASONRY	
040511	Mortar and Masonry Grout
DIVISION 5 METALS	
055000	Metal Fabrications
DIVISION 6 WOOD, PLASTICS AND COMPOSITES	
061000	Rough Carpentry
DIVISION 7 THERMAL AND MOISTURE PROTECTION	
070150.19	Preparation for Re-Roofing
075423	Thermoplastic Polyolefin (TPO) Roofing
076200	Sheet Metal Flashing and Trim
077200	Roof Accessories
079200	Joint Sealants
DIVISION 8 OPENINGS	
081213	Hollow Metal Frames
081416	Flush Wood Doors
085113	Aluminum Windows
085659	Service and Teller Window Units
087100	Door Hardware
088000	Glazing
088300	Mirrors

DIVISION 9 FINISHES

092216	Gypsum Board Assemblies
095100	Acoustical Ceilings
096500	Resilient Flooring
096513	Tile Carpeting
099123	Interior Painting

DIVISION 10 SPECIALTIES

101400	Signage
102113.16	Plastic Laminate Clad Toilet Compartments
102600	Wall and Door Protection
102800	Toilet, Bath, and Laundry Accessories

DIVISION 12-FURNISHINGS

123600	Countertops

DIVISION 22-PLUMBING

220719	Plumbing Piping Insulation
221005	Plumbing Piping
221006	Plumbing Piping Specialties
223000	Plumbing Equipment
224000	Plumbing Fixtures

DIVISION 23- HEATING VENTILATING AND AIR CONDITIONING

230553	Identification for HVAC Piping and Equipment
230593	Testing, Adjusting, and Balancing for HVAC
232300	Refrigerant Piping
233100	HVAC Ducts and Casings
233423	HVAC Power Ventilators
233723	Air Outlets and Inlets
238129	Variable Refrigerant Flow HVAC Systems

DIVISION 26-ELECTRICAL

260505	Selective Demolition for Electrical
260519	Low Voltage Electrical Power Conductors and Cables
260529	Hangers and Supports for Electrical Systems
260533.13	Conduit for Electrical Systems
260533.16	Boxes for Electrical Systems
260553	Identification for Electrical Systems
260583	Wiring Connections
260923	Lighting Control Devices
262726	Wiring Devices
262816.13	Enclosed Circuit Breakers
265100	Interior Lighting

DIVISION 28-ELECTRICAL SAFETY AND SECURITY

282000	Video Surveillance

END OF TOC

SECTION 01 10 00
SUMMARY

PART 1 GENERAL

1.01 PROJECT

A. Project Name: Mills Utility Building

B. Owner's Name: City of Las Vegas .

C. Architect's Name: WHPacific, Inc..

D. The Project consists of the alteration of an exisiting building to include phased renovation of offices, restrooms and circulation spaces, new HVAC systems, new ADA restroom and new singly ply roof..

1.02 CONTRACT DESCRIPTION

A. Contract Type: A single prime contract based on a Stipulated Price as described in Document 00 52 00 - Agreement Form.

1.03 OWNER OCCUPANCY

A. Owner intends to occupy the Project upon Substantial Completion.

B. Cooperate with Owner to minimize conflict and to facilitate Owner's operations.

C. Schedule the Work to accommodate Owner occupancy.

1.04 CONTRACTOR USE OF SITE AND PREMISES

A. Construction Operations: Limited to areas noted on Drawings.

B. Provide access to and from site as required by law and by Owner:
   1. Emergency Building Exits During Construction: Keep all exits required by code open during construction period; provide temporary exit signs if exit routes are temporarily altered.
   2. Do not obstruct roadways, sidewalks, or other public ways without permit.

1.05 SPECIFICATION SECTIONS APPLICABLE TO ALL CONTRACTS

A. Unless otherwise noted, all provisions of the sections listed below apply to all contracts. Specific items of work listed under individual contract descriptions constitute exceptions.

B. Section 01 20 00 - Price and Payment Procedures.

C. Section 01 40 00 - Quality Requirements.

D. Section 01 50 00 - Temporary Facilities and Controls.

E. Section 01 60 00 - Product Requirements.

F. Section 01 70 00 - Execution and Closeout Requirements.

G. Section 01 78 00 - Closeout Submittals.

END OF SECTION

SECTION 01 20 00
PRICE AND PAYMENT PROCEDURES

PART 1 GENERAL

1.01 SECTION INCLUDES

A. Procedures for preparation and submittal of applications for progress payments.

B. Documentation of changes in Contract Sum and Contract Time.

C. Change procedures.

D. Procedures for preparation and submittal of application for final payment.

1.02 SCHEDULE OF VALUES

A. Electronic media printout including equivalent information will be considered in lieu of standard form specified; submit draft to Architect for approval.

B. Forms filled out by hand will not be accepted.

1.03 APPLICATIONS FOR PROGRESS PAYMENTS

A. Payment Period: Submit at intervals stipulated in the Agreement.

B. Electronic media printout including equivalent information will be considered in lieu of standard form specified; submit sample to Architect for approval.

C. Forms filled out by hand will not be accepted.

D. Execute certification by signature of authorized officer.

E. Submit one electronic and three hard-copies of each Application for Payment.

1.04 MODIFICATION PROCEDURES

A. For minor changes not involving an adjustment to the Contract Sum or Contract Time, Architect will issue instructions directly to Contractor.

B. For other required changes, Architect will issue a document signed by Owner instructing Contractor to proceed with the change, for subsequent inclusion in a Change Order.
   1. The document will describe the required changes and will designate method of determining any change in Contract Sum or Contract Time.
   2. Promptly execute the change.

C. For changes for which advance pricing is desired, Architect will issue a document that includes a detailed description of a proposed change with supplementary or revised drawings and specifications, a change in Contract Time for executing the change with a stipulation of any overtime work required and the period of time during which the requested price will be considered valid. Contractor shall prepare and submit a fixed price quotation within 7 days.

D. Computation of Change in Contract Amount: As specified in the Agreement and Conditions of the Contract.

E. Execution of Change Orders: Architect will issue Change Orders for signatures of parties as provided in the Conditions of the Contract.

1.05 APPLICATION FOR FINAL PAYMENT

A. Prepare Application for Final Payment as specified for progress payments, identifying total adjusted Contract Sum, previous payments, and sum remaining due.

B. Application for Final Payment will not be considered until the following have been accomplished:
   1. All closeout procedures specified in Section 01 70 00.

END OF SECTION

SECTION 01 25 00
SUBSTITUTION PROCEDURES

PART 1 GENERAL

1.01 SECTION INCLUDES

A. Procedural requirements for proposed substitutions.

1.02 DEFINITIONS

A. Substitutions: Changes from Contract Documents requirements proposed by Contractor to materials, products, assemblies, and equipment.

PART 2 PRODUCTS - NOT USED

PART 3 EXECUTION

3.01 GENERAL REQUIREMENTS

A. A Substitution Request for products, assemblies, materials, and equipment constitutes a representation that the submitter:
   1. Has investigated proposed product and determined that it meets or exceeds the quality level of the specified product, equipment, assembly, or system.
   2. Agrees to provide the same warranty for the substitution as for the specified product.
   3. Agrees to coordinate installation and make changes to other work that may be required for the work to be complete, with no additional cost to Owner.
   4. Waives claims for additional costs or time extension that may subsequently become apparent.

B. Document each request with complete data substantiating compliance of proposed substitution with Contract Documents. Burden of proof is on proposer.

C. Content: Include information necessary for tracking the status of each Substitution Request, and information necessary to provide an actionable response.

D. Limit each request to a single proposed substitution item.

3.02 SUBSTITUTION PROCEDURES DURING CONSTRUCTION

A. Submit request for Substitution for Convenience immediately upon discovery of its potential advantage to the project, but not later than 14 days prior to time required for review and approval by Architect, in order to stay on approved project schedule.
   1. In addition to meeting general documentation requirements, document how the requested substitution benefits the Owner through cost savings, time savings, greater energy conservation, or in other specific ways.
   2. Document means of coordinating of substitution item with other portions of the work, including work by affected subcontractors.
   3. Bear the costs engendered by proposed substitution of:
      a. Owner's compensation to the Architect for any required redesign, time spent processing and evaluating the request.

3.03 RESOLUTION

A. Architect may request additional information and documentation prior to rendering a decision. Provide this data in an expeditious manner.

B. Architect will notify Contractor in writing of decision to accept or reject request.
   1. Architect's decision following review of proposed substitution will be noted on the submitted form.

3.04 ACCEPTANCE

A. Accepted substitutions change the work of the Project. They will be documented and incorporated into work of the project by Change Order, Construction Change Directive, Architectural Supplementary Instructions, or similar instruments provided for in the Conditions of the Contract.

3.05 CLOSEOUT ACTIVITIES

A. See Section 01 78 00 - Closeout Submittals, for closeout submittals.

B. Include completed Substitution Request Forms as part of the Project record. Include both approved and rejected Requests.

END OF SECTION

SECTION 01 30 00
ADMINISTRATIVE REQUIREMENTS

PART 1 GENERAL

1.01 SECTION INCLUDES

A. General administrative requirements.
B. Preconstruction meeting.
C. Progress meetings.
D. Construction progress schedule.
E. Submittals for review, information, and project closeout.
F. Number of copies of submittals.
G. Requests for Information (RFI) procedures.
H. Submittal procedures.

1.02 RELATED REQUIREMENTS

A. Section 01 78 00 - Closeout Submittals: Project record documents; operation and maintenance data; warranties and bonds.

1.03 GENERAL ADMINISTRATIVE REQUIREMENTS

A. Comply with requirements of Section 01 70 00 - Execution and Closeout Requirements for coordination of execution of administrative tasks with timing of construction activities.
B. Make the following types of submittals to Architect:
   1. Requests for Information (RFI).
   2. Requests for substitution.
   3. Shop drawings, product data, and samples.
   4. Test and inspection reports.
   5. Design data.
   6. Manufacturer's instructions and field reports.
   7. Applications for payment and change order requests.
   8. Progress schedules.
   9. Coordination drawings.
   10. Correction Punch List and Final Correction Punch List for Substantial Completion.
   11. Closeout submittals.
   12. Manufacturer's warranties.

PART 2 PRODUCTS - NOT USED

PART 3 EXECUTION

3.01 PRECONSTRUCTION MEETING

A. Attendance Required:
   1. Owner.
   2. Architect.
   3. Contractor.
B. Agenda:
   1. Execution of Owner-Contractor Agreement.
   2. Submission of executed bonds and insurance certificates.
   3. Distribution of Contract Documents.
   4. Submission of list of subcontractors, list of products, schedule of values, and progress schedule.
   5. Designation of personnel representing the parties to Contract, Owner and Architect.
   6. Procedures and processing of field decisions, submittals, substitutions, applications for payments, proposal request, Change Orders, and Contract closeout procedures.
   7. Scheduling.

C. Record minutes and distribute copies within two days after meeting to participants, with two copies to Architect, Owner, participants, and those affected by decisions made.

3.02 PROGRESS MEETINGS

A. Schedule and administer meetings throughout progress of the work at maximum bi-monthly intervals.

B. Attendance Required:
   1. Contractor.
   2. Owner.
   3. Architect.
   4. Contractor's superintendent.
   5. Major subcontractors.

C. Agenda:
   1. Review minutes of previous meetings.
   2. Review of work progress.
   3. Field observations, problems, and decisions.
   4. Identification of problems that impede, or will impede, planned progress.
   5. Review of submittals schedule and status of submittals.
   6. Maintenance of progress schedule.
   7. Corrective measures to regain projected schedules.
   8. Planned progress during succeeding work period.
   9. Maintenance of quality and work standards.
   10. Effect of proposed changes on progress schedule and coordination.
   11. Other business relating to work.

D. Record minutes and distribute copies within two days after meeting to participants, with two copies to Architect, Owner, participants, and those affected by decisions made.

3.03 CONSTRUCTION PROGRESS SCHEDULE

A. If preliminary schedule requires revision after review, submit revised schedule within 10 days.

B. Within 20 days after review of preliminary schedule, submit draft of proposed complete schedule for review.
   1. Include written certification that major contractors have reviewed and accepted proposed schedule.

C. Within 10 days after joint review, submit complete schedule.

D. Submit updated schedule with each Application for Payment.

3.04 REQUESTS FOR INFORMATION (RFI)

A. Definition: A request seeking one of the following:
   1. An interpretation, amplification, or clarification of some requirement of Contract Documents arising from inability to determine from them the exact material, process, or system to be installed; or when the elements of construction are required to occupy the same space (interference); or when an item of work is described differently at more than one place in the Contract Documents.
   2. A resolution to an issue which has arisen due to field conditions and affects design intent.

B. Whenever possible, request clarifications at the next appropriate project progress meeting, with response entered into meeting minutes, rendering unnecessary the issuance of a formal RFI.

C. Preparation: Prepare an RFI immediately upon discovery of a need for interpretation of the Contract Documents. Failure to submit a RFI in a timely manner is not a legitimate cause for claiming additional costs or delays in execution of the work.
   1. Prepare a separate RFI for each specific item.
      a. Review, coordinate, and comment on requests originating with subcontractors and/or materials suppliers.

b. Do not forward requests which solely require internal coordination between subcontractors.

2. Prepare in a format and with content acceptable to Owner.

D. Reason for the RFI: Prior to initiation of an RFI, carefully study all Contract Documents to confirm that information sufficient for their interpretation is definitely not included.

1. Unacceptable Uses for RFIs: Do not use RFIs to request the following::
2. Frivolous RFIs: Requests regarding information that is clearly indicated on, or reasonably inferable from, the Contract Documents, with no additional input required to clarify the question. They will be returned without a response, with an explanatory notation.
   a. The Owner reserves the right to assess the Contractor for the costs (on time-and-materials basis) incurred by the Architect, and any of its consultants, due to processing of such RFIs.

E. RFI Log: Prepare and maintain a tabular log of RFIs for the duration of the project.

F. Review Time: Architect will respond and return RFIs to Contractor within seven calendar days of receipt. For the purpose of establishing the start of the mandated response period, RFIs received after 12:00 noon will be considered as having been received on the following regular working day.

G. Responses: Content of answered RFIs will not constitute in any manner a directive or authorization to perform extra work or delay the project. If in Contractor's belief it is likely to lead to a change to Contract Sum or Contract Time, promptly issue a notice to this effect, and follow up with an appropriate Change Order request to Owner.

3.05 SUBMITTAL SCHEDULE

A. Submit to Architect for review a schedule for submittals in tabular format.

3.06 SUBMITTALS FOR REVIEW

A. When the following are specified in individual sections, submit them for review:

1. Product data.
2. Shop drawings.
3. Samples for selection.
4. Samples for verification.

B. Submit to Architect for review for the limited purpose of checking for compliance with information given and the design concept expressed in the contract documents.

C. Samples will be reviewed for aesthetic, color, or finish selection.

D. After review, provide copies and distribute in accordance with SUBMITTAL PROCEDURES article below and for record documents purposes described in Section 01 78 00 - Closeout Submittals.

3.07 SUBMITTALS FOR INFORMATION

A. When the following are specified in individual sections, submit them for information:

1. Design data.
2. Certificates.
3. Test reports.
4. Inspection reports.
5. Manufacturer's instructions.
6. Manufacturer's field reports.
7. Other types indicated.

B. Submit for Architect's knowledge as contract administrator or for Owner.

3.08 SUBMITTALS FOR PROJECT CLOSEOUT

A. Submit Correction Punch List for Substantial Completion.

B. Submit Final Correction Punch List for Substantial Completion.

C. When the following are specified in individual sections, submit them at project closeout in compliance with requirements of Section 01 78 00 - Closeout Submittals:
   1. Project record documents.
   2. Operation and maintenance data.
   3. Warranties.
   4. Bonds.
   5. Other types as indicated.

D. Submit for Owner's benefit during and after project completion.

3.09 NUMBER OF COPIES OF SUBMITTALS

A. Electronic Documents: Submit one electronic copy in PDF format; an electronically-marked up file will be returned. Create PDFs at native size and right-side up; illegible files will be rejected.

B. Samples: Submit the number specified in individual specification sections; one of which will be retained by Architect.
   1. After review, produce duplicates.
   2. Retained samples will not be returned to Contractor unless specifically so stated.

3.10 SUBMITTAL PROCEDURES

A. General Requirements:
   1. Use a separate transmittal for each item.
   2. Transmit using approved form.
      a. Use Contractor's form, subject to prior approval by Architect.
   3. Sequentially identify each item. For revised submittals use original number and a sequential numerical suffix.
   4. Apply Contractor's stamp, signed or initialed certifying that review, approval, verification of products required, field dimensions, adjacent construction work, and coordination of information is in accordance with the requirements of the work and Contract Documents.
      a. Submittals from sources other than the Contractor, or without Contractor's stamp will not be acknowledged, reviewed, or returned.
   5. When revised for resubmission, identify all changes made since previous submission.

B. Product Data Procedures:
   1. Submit only information required by individual specification sections.
   2. Collect required information into a single submittal.
   3. Do not submit (Material) Safety Data Sheets for materials or products.

C. Shop Drawing Procedures:
   1. Prepare accurate, drawn-to-scale, original shop drawing documentation by interpreting the Contract Documents and coordinating related work.
   2. Generic, non-project-specific information submitted as shop drawings do not meet the requirements for shop drawings.

D. Samples Procedures:
   1. Transmit related items together as single package.
   2. Identify each item to allow review for applicability in relation to shop drawings showing installation locations.

3.11 SUBMITTAL REVIEW

A. Submittals for Review: Architect will review each submittal, and approve, or take other appropriate action.

B. Submittals for Information: Architect will acknowledge receipt and review. See below for actions to be taken.

C. Architect's actions will be reflected by marking each returned submittal using virtual stamp on electronic submittals.

D. Architect's and consultants' actions on items submitted for review:
   1. Authorizing purchasing, fabrication, delivery, and installation:

a. "Approved", or language with same legal meaning.
b. "Approved as Noted, Resubmission not required", or language with same legal meaning.
1) At Contractor's option, submit corrected item, with review notations acknowledged and incorporated.
c. "Approved as Noted, Resubmit for Record", or language with same legal meaning.

2. Not Authorizing fabrication, delivery, and installation:

E. Architect's and consultants' actions on items submitted for information:

1. Items for which no action was taken:
a. "Received" - to notify the Contractor that the submittal has been received for record only.

2. Items for which action was taken:
a. "Reviewed" - no further action is required from Contractor.

END OF SECTION

SECTION 01 50 00
TEMPORARY FACILITIES AND CONTROLS

PART 1 GENERAL

1.01 SECTION INCLUDES

A. Temporary sanitary facilities.

B. Temporary Controls: Barriers, enclosures, and fencing.

C. Security requirements.

D. Vehicular access and parking.

E. Waste removal facilities and services.

1.02 TEMPORARY SANITARY FACILITIES

A. Provide and maintain required facilities and enclosures. Provide at time of project mobilization.

B. Maintain daily in clean and sanitary condition.

1.03 BARRIERS

A. Provide barriers to prevent unauthorized entry to construction areas, to prevent access to areas that could be hazardous to workers or the public, to allow for owner's use of site and to protect existing facilities and adjacent properties from damage from construction operations and demolition.

B. Provide barricades and covered walkways required by governing authorities for public rights-of-way and for public access to existing building.

C. Protect non-owned vehicular traffic, stored materials, site, and structures from damage.

1.04 FENCING

A. Provide 6 foot high fence around construction site; equip with vehicular and pedestrian gates with locks.

1.05 SECURITY

A. Provide security and facilities to protect Work, existing facilities, and Owner's operations from unauthorized entry, vandalism, or theft.

1.06 VEHICULAR ACCESS AND PARKING

A. Coordinate access and haul routes with governing authorities and Owner.

B. Provide and maintain access to fire hydrants, free of obstructions.

C. Provide means of removing mud from vehicle wheels before entering streets.

D. Provide temporary parking areas to accommodate construction personnel. When site space is not adequate, provide additional off-site parking.

1.07 WASTE REMOVAL

A. Provide waste removal facilities and services as required to maintain the site in clean and orderly condition.

B. Provide containers with lids. Remove trash from site periodically.

C. If materials to be recycled or re-used on the project must be stored on-site, provide suitable non-combustible containers; locate containers holding flammable material outside the structure unless otherwise approved by the authorities having jurisdiction.

D. Open free-fall chutes are not permitted. Terminate closed chutes into appropriate containers with lids.

PART 2 PRODUCTS - NOT USED

END OF SECTION

SECTION 01 70 00
EXECUTION AND CLOSEOUT REQUIREMENTS

PART 1 GENERAL

1.01 SECTION INCLUDES

A. Examination, preparation, and general installation procedures.

B. Cutting and patching.

C. Surveying for laying out the work.

D. Cleaning and protection.

E. Closeout procedures, including Contractor's Correction Punch List, except payment procedures.

F. General requirements for maintenance service.

1.02 SUBMITTALS

A. See Section 01 30 00 - Administrative Requirements, for submittal procedures.

B. Survey work: Submit name, address, and telephone number of Surveyor before starting survey work.
   1. On request, submit documentation verifying accuracy of survey work.
   2. Submit a copy of site drawing signed by the Land Surveyor, that the elevations and locations of the work are in compliance with Contract Documents.
   3. Submit surveys and survey logs for the project record.

C. Cutting and Patching: Submit written request in advance of cutting or alteration that affects:
   1. Structural integrity of any element of Project.
   2. Integrity of weather exposed or moisture resistant element.
   3. Efficiency, maintenance, or safety of any operational element.
   4. Visual qualities of sight exposed elements.
   5. Work of Owner or separate Contractor.

D. Project Record Documents: Accurately record actual locations of capped and active utilities.

1.03 QUALIFICATIONS

A. For surveying work, employ a land surveyor registered in New Mexico and acceptable to Architect. Submit evidence of surveyor's Errors and Omissions insurance coverage in the form of an Insurance Certificate. Employ only individual(s) trained and experienced in collecting and recording accurate data relevant to ongoing construction activities,

1.04 PROJECT CONDITIONS

A. Ventilate enclosed areas to assist cure of materials, to dissipate humidity, and to prevent accumulation of dust, fumes, vapors, or gases.

B. Pest and Rodent Control: Provide methods, means, and facilities to prevent pests and insects from damaging the work.

PART 2 PRODUCTS

2.01 PATCHING MATERIALS

A. New Materials: As specified in product sections; match existing products and work for patching and extending work.

B. Type and Quality of Existing Products: Determine by inspecting and testing products where necessary, referring to existing work as a standard.

C. Product Substitution: For any proposed change in materials, submit request for substitution described in Section 01 60 00 - Product Requirements.

PART 3 EXECUTION

3.01 EXAMINATION

A. Verify that existing site conditions and substrate surfaces are acceptable for subsequent work. Start of work means acceptance of existing conditions.

B. Verify that existing substrate is capable of structural support or attachment of new work being applied or attached.

C. Examine and verify specific conditions described in individual specification sections.

D. Take field measurements before confirming product orders or beginning fabrication, to minimize waste due to over-ordering or misfabrication.

E. Verify that utility services are available, of the correct characteristics, and in the correct locations.

F. Prior to Cutting: Examine existing conditions prior to commencing work, including elements subject to damage or movement during cutting and patching. After uncovering existing work, assess conditions affecting performance of work. Beginning of cutting or patching means acceptance of existing conditions.

3.02 PREPARATION

A. Clean substrate surfaces prior to applying next material or substance.

B. Seal cracks or openings of substrate prior to applying next material or substance.

C. Apply manufacturer required or recommended substrate primer, sealer, or conditioner prior to applying any new material or substance in contact or bond.

3.03 LAYING OUT THE WORK

A. Verify locations of survey control points prior to starting work.

B. Promptly notify Architect of any discrepancies discovered.

C. Protect survey control points prior to starting site work; preserve permanent reference points during construction.

D. Promptly report to Architect the loss or destruction of any reference point or relocation required because of changes in grades or other reasons.

E. Replace dislocated survey control points based on original survey control. Make no changes without prior written notice to Architect.

F. Utilize recognized engineering survey practices.

G. Establish elevations, lines and levels. Locate and lay out by instrumentation and similar appropriate means:
   1. Site improvements including pavements; stakes for grading, fill and topsoil placement; utility locations, slopes, and invert elevations.
   2. Grid or axis for structures.
   3. Building foundation, column locations, ground floor elevations.

H. Periodically verify layouts by same means.

I. Maintain a complete and accurate log of control and survey work as it progresses.

3.04 GENERAL INSTALLATION REQUIREMENTS

A. Install products as specified in individual sections, in accordance with manufacturer's instructions and recommendations, and so as to avoid waste due to necessity for replacement.

B. Make vertical elements plumb and horizontal elements level, unless otherwise indicated.

C. Install equipment and fittings plumb and level, neatly aligned with adjacent vertical and horizontal lines, unless otherwise indicated.

D. Make consistent texture on surfaces, with seamless transitions, unless otherwise indicated.

E. Make neat transitions between different surfaces, maintaining texture and appearance.

3.05 CUTTING AND PATCHING

A. Whenever possible, execute the work by methods that avoid cutting or patching.

B. Perform whatever cutting and patching is necessary to:
   1. Complete the work.
   2. Fit products together to integrate with other work.
   3. Provide openings for penetration of mechanical, electrical, and other services.
   4. Match work that has been cut to adjacent work.
   5. Repair areas adjacent to cuts to required condition.
   6. Repair new work damaged by subsequent work.
   7. Remove samples of installed work for testing when requested.
   8. Remove and replace defective and non-complying work.

C. Execute work by methods that avoid damage to other work and that will provide appropriate surfaces to receive patching and finishing. In existing work, minimize damage and restore to original condition.

D. Employ original installer to perform cutting for weather exposed and moisture resistant elements, and sight exposed surfaces.

E. Cut rigid materials using masonry saw or core drill. Pneumatic tools not allowed without prior approval.

F. Restore work with new products in accordance with requirements of Contract Documents.

G. Fit work air tight to pipes, sleeves, ducts, conduit, and other penetrations through surfaces.

H. At penetrations of fire rated walls, partitions, ceiling, or floor construction, completely seal voids with fire rated material in accordance with Section 07 84 00, to full thickness of the penetrated element.

I. Patching:
   1. Finish patched surfaces to match finish that existed prior to patching. On continuous surfaces, refinish to nearest intersection or natural break. For an assembly, refinish entire unit.
   2. Match color, texture, and appearance.
   3. Repair patched surfaces that are damaged, lifted, discolored, or showing other imperfections due to patching work. If defects are due to condition of substrate, repair substrate prior to repairing finish.

3.06 PROGRESS CLEANING

A. Maintain areas free of waste materials, debris, and rubbish. Maintain site in a clean and orderly condition.

B. Remove debris and rubbish from pipe chases, plenums, attics, crawl spaces, and other closed or remote spaces, prior to enclosing the space.

C. Broom and vacuum clean interior areas prior to start of surface finishing, and continue cleaning to eliminate dust.

D. Collect and remove waste materials, debris, and trash/rubbish from site periodically and dispose off-site; do not burn or bury.

3.07 PROTECTION OF INSTALLED WORK

A. Protect installed work from damage by construction operations.

B. Provide special protection where specified in individual specification sections.

C. Provide temporary and removable protection for installed products. Control activity in immediate work area to prevent damage.

D. Provide protective coverings at walls, projections, jambs, sills, and soffits of openings.

E. Protect finished floors, stairs, and other surfaces from traffic, dirt, wear, damage, or movement of heavy objects, by protecting with durable sheet materials.

F. Prohibit traffic or storage upon waterproofed or roofed surfaces. If traffic or activity is necessary, obtain recommendations for protection from waterproofing or roofing material manufacturer.

G. Remove protective coverings when no longer needed; reuse or recycle coverings if possible.

3.08 ADJUSTING

A. Adjust operating products and equipment to ensure smooth and unhindered operation.

3.09 FINAL CLEANING

A. Use cleaning materials that are nonhazardous.

B. Clean interior and exterior glass, surfaces exposed to view; remove temporary labels, stains and foreign substances, polish transparent and glossy surfaces, vacuum carpeted and soft surfaces.

C. Remove all labels that are not permanent. Do not paint or otherwise cover fire test labels or nameplates on mechanical and electrical equipment.

D. Clean equipment and fixtures to a sanitary condition with cleaning materials appropriate to the surface and material being cleaned.

E. Clean filters of operating equipment.

F. Clean debris from roofs, gutters, downspouts, scuppers, overflow drains, area drains, and drainage systems.

G. Clean site; sweep paved areas, rake clean landscaped surfaces.

H. Remove waste, surplus materials, trash/rubbish, and construction facilities from the site; dispose of in legal manner; do not burn or bury.

3.10 CLOSEOUT PROCEDURES

A. Make submittals that are required by governing or other authorities.

B. Accompany Project Coordinator on preliminary inspection to determine items to be listed for completion or correction in the Contractor's Correction Punch List for Contractor's Notice of Substantial Completion.

C. Notify Architect when work is considered ready for Architect's Substantial Completion inspection.

D. Submit written certification containing Contractor's Correction Punch List, that Contract Documents have been reviewed, work has been inspected, and that work is complete in accordance with Contract Documents and ready for Architect's Substantial Completion inspection.

E. Conduct Substantial Completion inspection and create Final Correction Punch List containing Architect's and Contractor's comprehensive list of items identified to be completed or corrected and submit to Architect.

F. Correct items of work listed in Final Correction Punch List and comply with requirements for access to Owner-occupied areas.

G. Notify Architect when work is considered finally complete and ready for Architect's Substantial Completion final inspection.

H. Complete items of work determined by Architect listed in executed Certificate of Substantial Completion.

3.11 MAINTENANCE

A. Provide service and maintenance of components indicated in specification sections.

B. Maintenance Period: As indicated in specification sections or, if not indicated, not less than one year from the Date of Substantial Completion or the length of the specified warranty, whichever is longer.

C. Examine system components at a frequency consistent with reliable operation. Clean, adjust, and lubricate as required.

D. Include systematic examination, adjustment, and lubrication of components. Repair or replace parts whenever required. Use parts produced by the manufacturer of the original component.

E. Maintenance service shall not be assigned or transferred to any agent or subcontractor without prior written consent of the Owner.

END OF SECTION

SECTION 01 74 19
CONSTRUCTION WASTE MANAGEMENT AND DISPOSAL

PART 1 GENERAL

1.01 WASTE MANAGEMENT REQUIREMENTS

A. Owner requires that this project generate the least amount of trash and waste possible.

B. Employ processes that ensure the generation of as little waste as possible due to error, poor planning, breakage, mishandling, contamination, or other factors.

C. Minimize trash/waste disposal in landfills; reuse, salvage, or recycle as much waste as economically feasible.

D. Contractor shall submit periodic Waste Disposal Reports; all landfill disposal, incineration, recycling, salvage, and reuse must be reported regardless of to whom the cost or savings accrues; use the same units of measure on all reports.

E. Methods of trash/waste disposal that are not acceptable are:
   1. Burning on the project site.
   2. Burying on the project site.
   3. Dumping or burying on other property, public or private.
   4. Other illegal dumping or burying.

F. Regulatory Requirements: Contractor is responsible for knowing and complying with regulatory requirements, including but not limited to Federal, state and local requirements, pertaining to legal disposal of all construction and demolition waste materials.

1.02 RELATED REQUIREMENTS

A. Section 01 30 00 - Administrative Requirements: Additional requirements for project meetings, reports, submittal procedures, and project documentation.

B. Section 01 50 00 - Temporary Facilities and Controls: Additional requirements related to trash/waste collection and removal facilities and services.

C. Section 01 60 00 - Product Requirements: Waste prevention requirements related to delivery, storage, and handling.

D. Section 01 70 00 - Execution and Closeout Requirements: Trash/waste prevention procedures related to demolition, cutting and patching, installation, protection, and cleaning.

1.03 DEFINITIONS

A. Clean: Untreated and unpainted; not contaminated with oils, solvents, caulk, or the like.

B. Construction and Demolition Waste: Solid wastes typically including building materials, packaging, trash, debris, and rubble resulting from construction, remodeling, repair and demolition operations.

C. Hazardous: Exhibiting the characteristics of hazardous substances, i.e., ignitibility, corrosivity, toxicity or reactivity.

D. Nonhazardous: Exhibiting none of the characteristics of hazardous substances, i.e., ignitibility, corrosivity, toxicity, or reactivity.

E. Nontoxic: Neither immediately poisonous to humans nor poisonous after a long period of exposure.

F. Recyclable: The ability of a product or material to be recovered at the end of its life cycle and remanufactured into a new product for reuse by others.

G. Recycle: To remove a waste material from the project site to another site for remanufacture into a new product for reuse by others.

H. Recycling: The process of sorting, cleansing, treating and reconstituting solid waste and other discarded materials for the purpose of using the altered form. Recycling does not include burning, incinerating, or thermally destroying waste.

I. Return: To give back reusable items or unused products to vendors for credit.

J. Reuse: To reuse a construction waste material in some manner on the project site.

K. Salvage: To remove a waste material from the project site to another site for resale or reuse by others.

L. Sediment: Soil and other debris that has been eroded and transported by storm or well production run-off water.

M. Source Separation: The act of keeping different types of waste materials separate beginning from the first time they become waste.

N. Toxic: Poisonous to humans either immediately or after a long period of exposure.

O. Trash: Any product or material unable to be reused, returned, recycled, or salvaged.

P. Waste: Extra material or material that has reached the end of its useful life in its intended use. Waste includes salvageable, returnable, recyclable, and reusable material.

1.04 SUBMITTALS

A. See Section 01 30 00 - Administrative Requirements, for submittal procedures.

PART 2 PRODUCTS

2.01 PRODUCT SUBSTITUTIONS

A. See Section 01 60 00 - Product Requirements for substitution submission procedures.

PART 3 EXECUTION

3.01 WASTE MANAGEMENT PROCEDURES

A. See Section 01 30 00 for additional requirements for project meetings, reports, submittal procedures, and project documentation.

B. See Section 01 50 00 for additional requirements related to trash/waste collection and removal facilities and services.

C. See Section 01 60 00 for waste prevention requirements related to delivery, storage, and handling.

D. See Section 01 70 00 for trash/waste prevention procedures related to demolition, cutting and patching, installation, protection, and cleaning.

END OF SECTION

SECTION 01 78 00
CLOSEOUT SUBMITTALS

PART 1 GENERAL

1.01 SECTION INCLUDES

A. Project Record Documents.

B. Operation and Maintenance Data.

C. Warranties and bonds.

1.02 RELATED REQUIREMENTS

A. Section 01 30 00 - Administrative Requirements: Submittals procedures, shop drawings, product data, and samples.

B. Section 01 70 00 - Execution and Closeout Requirements: Contract closeout procedures.

C. Individual Product Sections: Specific requirements for operation and maintenance data.

D. Individual Product Sections: Warranties required for specific products or Work.

1.03 SUBMITTALS

A. Project Record Documents: Submit documents to Architect with claim for final Application for Payment.

B. Operation and Maintenance Data:
   1. Submit two copies of preliminary draft or proposed formats and outlines of contents before start of Work. Architect will review draft and return one copy with comments.
   2. For equipment, or component parts of equipment put into service during construction and operated by Owner, submit completed documents within ten days after acceptance.
   3. Submit one copy of completed documents 15 days prior to final inspection. This copy will be reviewed and returned after final inspection, with Architect comments. Revise content of all document sets as required prior to final submission.
   4. Submit two sets of revised final documents in final form within 10 days after final inspection.

C. Warranties and Bonds:
   1. For equipment or component parts of equipment put into service during construction with Owner's permission, submit documents within 10 days after acceptance.
   2. Make other submittals within 10 days after Date of Substantial Completion, prior to final Application for Payment.
   3. For items of Work for which acceptance is delayed beyond Date of Substantial Completion, submit within 10 days after acceptance, listing the date of acceptance as the beginning of the warranty period.

PART 2 PRODUCTS - NOT USED

PART 3 EXECUTION

3.01 PROJECT RECORD DOCUMENTS

A. Maintain on site one set of the following record documents; record actual revisions to the Work:
   1. Drawings.
   2. Addenda.
   3. Change Orders and other modifications to the Contract.

B. Ensure entries are complete and accurate, enabling future reference by Owner.

C. Store record documents separate from documents used for construction.

D. Record information concurrent with construction progress.

E. Record Drawings: Legibly mark each item to record actual construction including:
   1. Measured locations of internal utilities and appurtenances concealed in construction, referenced to visible and accessible features of the Work.

2. Field changes of dimension and detail.
3. Details not on original Contract drawings.

3.02 OPERATION AND MAINTENANCE DATA

A. Source Data: For each product or system, list names, addresses and telephone numbers of Subcontractors and suppliers, including local source of supplies and replacement parts.

B. Product Data: Mark each sheet to clearly identify specific products and component parts, and data applicable to installation. Delete inapplicable information.

C. Drawings: Supplement product data to illustrate relations of component parts of equipment and systems, to show control and flow diagrams. Do not use Project Record Documents as maintenance drawings.

D. Typed Text: As required to supplement product data. Provide logical sequence of instructions for each procedure, incorporating manufacturer's instructions.

3.03 OPERATION AND MAINTENANCE DATA FOR MATERIALS AND FINISHES

A. For Each Product, Applied Material, and Finish:

B. Instructions for Care and Maintenance: Manufacturer's recommendations for cleaning agents and methods, precautions against detrimental cleaning agents and methods, and recommended schedule for cleaning and maintenance.

C. Where additional instructions are required, beyond the manufacturer's standard printed instructions, have instructions prepared by personnel experienced in the operation and maintenance of the specific products.

3.04 OPERATION AND MAINTENANCE DATA FOR EQUIPMENT AND SYSTEMS

A. For Each Item of Equipment and Each System:
1. Description of unit or system, and component parts.
2. Identify function, normal operating characteristics, and limiting conditions.
3. Include performance curves, with engineering data and tests.
4. Complete nomenclature and model number of replaceable parts.

B. Where additional instructions are required, beyond the manufacturer's standard printed instructions, have instructions prepared by personnel experienced in the operation and maintenance of the specific products.

C. Operating Procedures: Include start-up, break-in, and routine normal operating instructions and sequences. Include regulation, control, stopping, shut-down, and emergency instructions. Include summer, winter, and any special operating instructions.

D. Maintenance Requirements: Include routine procedures and guide for preventative maintenance and trouble shooting; disassembly, repair, and reassembly instructions; and alignment, adjusting, balancing, and checking instructions.

E. Provide servicing and lubrication schedule, and list of lubricants required.

F. Include manufacturer's printed operation and maintenance instructions.

G. Include sequence of operation by controls manufacturer.

H. Provide original manufacturer's parts list, illustrations, assembly drawings, and diagrams required for maintenance.

I. Additional Requirements: As specified in individual product specification sections.

3.05 ASSEMBLY OF OPERATION AND MAINTENANCE MANUALS

A. Assemble operation and maintenance data into durable manuals for Owner's personnel use, with data arranged in the same sequence as, and identified by, the specification sections.

B. Where systems involve more than one specification section, provide separate tabbed divider for each system.

C. Binders: Commercial quality, 8-1/2 by 11 inch three D side ring binders with durable plastic covers; 2 inch maximum ring size. When multiple binders are used, correlate data into related consistent groupings.

D. Cover: Identify each binder with typed or printed title OPERATION AND MAINTENANCE INSTRUCTIONS; identify title of Project; identify subject matter of contents.

E. Project Directory: Title and address of Project; names, addresses, and telephone numbers of Architect, Consultants, Contractor and subcontractors, with names of responsible parties.

F. Tables of Contents: List every item separated by a divider, using the same identification as on the divider tab; where multiple volumes are required, include all volumes Tables of Contents in each volume, with the current volume clearly identified.

G. Dividers: Provide tabbed dividers for each separate product and system; identify the contents on the divider tab; immediately following the divider tab include a description of product and major component parts of equipment.

H. Text: Manufacturer's printed data, or typewritten data on 20 pound paper.

I. Drawings: Provide with reinforced punched binder tab. Bind in with text; fold larger drawings to size of text pages.

3.06 WARRANTIES AND BONDS

A. Obtain warranties and bonds, executed in duplicate by responsible Subcontractors, suppliers, and manufacturers, within 10 days after completion of the applicable item of work. Except for items put into use with Owner's permission, leave date of beginning of time of warranty until Date of Substantial completion is determined.

B. Verify that documents are in proper form, contain full information, and are notarized.

C. Co-execute submittals when required.

D. Retain warranties and bonds until time specified for submittal.

E. Manual: Bind in commercial quality 8-1/2 by 11 inch three D side ring binders with durable plastic covers.

F. Cover: Identify each binder with typed or printed title WARRANTIES AND BONDS, with title of Project; name, address and telephone number of Contractor and equipment supplier; and name of responsible company principal.

G. Table of Contents: Neatly typed, in the sequence of the Table of Contents of the Project Manual, with each item identified with the number and title of the specification section in which specified, and the name of product or work item.

H. Separate each warranty or bond with index tab sheets keyed to the Table of Contents listing. Provide full information, using separate typed sheets as necessary. List Subcontractor, supplier, and manufacturer, with name, address, and telephone number of responsible principal.

END OF SECTION

SECTION 01 79 00
DEMONSTRATION AND TRAINING

PART 1 GENERAL

1.01 SUMMARY

A. Demonstration of products and systems to be commissioned and where indicated in specific specification sections.

B. Training of Owner personnel in operation and maintenance is required for:
   1. HVAC systems and equipment.

C. Training of Owner personnel in care, cleaning, maintenance, and repair is required for:

1.02 RELATED REQUIREMENTS

A. Section 01 78 00 - Closeout Submittals: Operation and maintenance manuals.

1.03 SUBMITTALS

A. See Section 01 30 00 - Administrative Requirements, for submittal procedures; except:
   1. Make all submittals specified in this section, and elsewhere where indicated for commissioning purposes, directly to the Commissioning Authority.
   2. Submit one copy to the Commissioning Authority, not to be returned.
   3. Make commissioning submittals on time schedule specified by Commissioning Authority.
   4. Submittals indicated as "Draft" are intended for the use of the Commissioning Authority in preparation of overall Training Plan; submit in editable electronic format, Microsoft Word 2003 preferred.

B. Draft Training Plans: Owner will designate personnel to be trained; tailor training to needs and skill-level of attendees.
   1. Submit to Commissioning Authority for review and inclusion in overall training plan.
   2. Submit not less than four weeks prior to start of training.
   3. Revise and resubmit until acceptable.
   4. Provide an overall schedule showing all training sessions.
   5. Include at least the following for each training session:
      a. Identification, date, time, and duration.
      b. Description of products and/or systems to be covered.
      c. Name of firm and person conducting training; include qualifications.
      d. Intended audience, such as job description.
      e. Objectives of training and suggested methods of ensuring adequate training.
      f. Methods to be used, such as classroom lecture, live demonstrations, hands-on, etc.
      g. Media to be used, such a slides, hand-outs, etc.
      h. Training equipment required, such as projector, projection screen, etc., to be provided by Contractor.

C. Training Manuals: Provide training manual for each attendee; allow for minimum of two attendees per training session.
   1. Include applicable portion of O&M manuals.
   2. Include copies of all hand-outs, slides, overheads, video presentations, etc., that are not included in O&M manuals.
   3. Provide one extra copy of each training manual to be included with operation and maintenance data.

D. Video Recordings: Submit digital video recording of each demonstration and training session for Owner's subsequent use.
   1. Format: DVD Disc.
   2. Label each disc and container with session identification and date.

1.04 QUALITY ASSURANCE

A. Instructor Qualifications: Familiar with design, operation, maintenance and troubleshooting of the relevant products and systems.

1. Provide as instructors the most qualified trainer of those contractors and/or installers who actually supplied and installed the systems and equipment.
2. Where a single person is not familiar with all aspects, provide specialists with necessary qualifications.

PART 2 PRODUCTS - NOT USED

PART 3 EXECUTION

3.01 DEMONSTRATION - GENERAL

A. Demonstrations conducted during system start-up do not qualify as demonstrations for the purposes of this section, unless approved in advance by Owner.

B. Demonstrations conducted during Functional Testing need not be repeated unless Owner personnel training is specified.

C. Demonstration may be combined with Owner personnel training if applicable.

D. Operating Equipment and Systems: Demonstrate operation in all modes, including start-up, shut-down, seasonal changeover, emergency conditions, and troubleshooting, and maintenance procedures, including scheduled and preventive maintenance.
   1. Perform demonstrations not less than two weeks prior to Substantial Completion.
   2. For equipment or systems requiring seasonal operation, perform demonstration for other season within six months.

E. Non-Operating Products: Demonstrate cleaning, scheduled and preventive maintenance, and repair procedures.
   1. Perform demonstrations not less than two weeks prior to Substantial Completion.

3.02 TRAINING - GENERAL

A. Commissioning Authority will prepare the Training Plan based on draft plans submitted.

B. Conduct training on-site unless otherwise indicated.

C. Owner will provide classroom and seating at no cost to Contractor.

D. Do not start training until Functional Testing is complete, unless otherwise specified or approved by the Commissioning Authority.

E. Provide training in minimum two hour segments.

F. The Commissioning Authority is responsible for determining that the training was satisfactorily completed and will provide approval forms.

G. Training schedule will be subject to availability of Owner's personnel to be trained; re-schedule training sessions as required by Owner; once schedule has been approved by Owner failure to conduct sessions according to schedule will be cause for Owner to charge Contractor for personnel "show-up" time.

H. Review of Facility Policy on Operation and Maintenance Data: During training discuss:
   1. The location of the O&M manuals and procedures for use and preservation; backup copies.
   2. Typical contents and organization of all manuals, including explanatory information, system narratives, and product specific information.
   3. Typical uses of the O&M manuals.

I. Product- and System-Specific Training:
   1. Review the applicable O&M manuals.
   2. For systems, provide an overview of system operation, design parameters and constraints, and operational strategies.
   3. Review instructions for proper operation in all modes, including start-up, shut-down, seasonal changeover and emergency procedures, and for maintenance, including preventative maintenance.
   4. Provide hands-on training on all operational modes possible and preventive maintenance.

5. Emphasize safe and proper operating requirements; discuss relevant health and safety issues and emergency procedures.
6. Discuss common troubleshooting problems and solutions.
7. Discuss any peculiarities of equipment installation or operation.
8. Discuss warranties and guarantees, including procedures necessary to avoid voiding coverage.
9. Review recommended tools and spare parts inventory suggestions of manufacturers.
10. Review spare parts and tools required to be furnished by Contractor.
11. Review spare parts suppliers and sources and procurement procedures.

J. Be prepared to answer questions raised by training attendees; if unable to answer during training session, provide written response within three days.

END OF SECTION

SECTION 02 41 00
DEMOLITION

PART 1 GENERAL

1.01 SECTION INCLUDES

A. Selective demolition of building elements for alteration purposes.

1.02 RELATED REQUIREMENTS

A. Section 01 10 00 - Summary: Limitations on Contractor's use of site and premises.

B. Section 01 50 00 - Temporary Facilities and Controls: Site fences, security, protective barriers, and waste removal.

C. Section 01 70 00 - Execution and Closeout Requirements: Project conditions; protection of bench marks, survey control points, and existing construction to remain; reinstallation of removed products; temporary bracing and shoring.

D. Section 01 74 19 - Construction Waste Management and Disposal: Limitations on disposal of removed materials; requirements for recycling.

E. Section 07 01 50.19 - Preparation for Re-Roofing: Removal of existing roofing, roof insulation, flashing, trim, and accessories.

1.03 SUBMITTALS

A. See Section 01 30 00 - Administrative Requirements, for submittal procedures.

B. Project Record Documents: Accurately record actual locations of capped and active utilities and subsurface construction.

PART 2 PRODUCTS -- NOT USED

PART 3 EXECUTION

3.01 GENERAL PROCEDURES AND PROJECT CONDITIONS

A. Comply with applicable codes and regulations for demolition operations and safety of adjacent structures and the public.
   1. Obtain required permits.
   2. Comply with applicable requirements of NFPA 241.
   3. Take precautions to prevent catastrophic or uncontrolled collapse of structures to be removed; do not allow worker or public access within range of potential collapse of unstable structures.
   4. Provide, erect, and maintain temporary barriers and security devices.
   5. Conduct operations to minimize effects on and interference with adjacent structures and occupants.
   6. Do not close or obstruct roadways or sidewalks without permit.
   7. Conduct operations to minimize obstruction of public and private entrances and exits; do not obstruct required exits at any time; protect persons using entrances and exits from removal operations.
   8. Obtain written permission from owners of adjacent properties when demolition equipment will traverse, infringe upon or limit access to their property.

B. Do not begin removal until receipt of notification to proceed from Owner.

C. Protect existing structures and other elements that are not to be removed.
   1. Provide bracing and shoring.
   2. Prevent movement or settlement of adjacent structures.
   3. Stop work immediately if adjacent structures appear to be in danger.

3.02 EXISTING UTILITIES

A. Coordinate work with utility companies; notify before starting work and comply with their requirements; obtain required permits.

B. Protect existing utilities to remain from damage.

C. Do not disrupt public utilities without permit from authority having jurisdiction.

D. Do not close, shut off, or disrupt existing life safety systems that are in use without at least 7 days prior written notification to Owner.

E. Do not close, shut off, or disrupt existing utility branches or take-offs that are in use without at least 3 days prior written notification to Owner.

F. Locate and mark utilities to remain; mark using highly visible tags or flags, with identification of utility type; protect from damage due to subsequent construction, using substantial barricades if necessary.

G. Remove exposed piping, valves, meters, equipment, supports, and foundations of disconnected and abandoned utilities.

3.03 SELECTIVE DEMOLITION FOR ALTERATIONS

A. Drawings showing existing construction and utilities are based on casual field observation and existing record documents only.
   1. Verify that construction and utility arrangements are as indicated.
   2. Report discrepancies to Architect before disturbing existing installation.
   3. Beginning of demolition work constitutes acceptance of existing conditions that would be apparent upon examination prior to starting demolition.

B. Maintain weatherproof exterior building enclosure except for interruptions required for replacement or modifications; take care to prevent water and humidity damage.

C. Remove existing work as indicated and as required to accomplish new work.
   1. Remove items indicated on drawings.

D. Services (Including but not limited to HVAC, Plumbing, Fire Protection, Electrical, and Telecommunications): Remove existing systems and equipment as indicated.
   1. Maintain existing active systems that are to remain in operation; maintain access to equipment and operational components.
   2. Where existing active systems serve occupied facilities but are to be replaced with new services, maintain existing systems in service until new systems are complete and ready for service.
   3. Verify that abandoned services serve only abandoned facilities before removal.
   4. Remove abandoned pipe, ducts, conduits, and equipment, including those above accessible ceilings; remove back to source of supply where possible, otherwise cap stub and tag with identification.

E. Protect existing work to remain.
   1. Prevent movement of structure; provide shoring and bracing if necessary.
   2. Perform cutting to accomplish removals neatly and as specified for cutting new work.
   3. Repair adjacent construction and finishes damaged during removal work.
   4. Patch as specified for patching new work.

3.04 DEBRIS AND WASTE REMOVAL

A. Remove debris, junk, and trash from site.

B. Leave site in clean condition, ready for subsequent work.

C. Clean up spillage and wind-blown debris from public and private lands.

END OF SECTION

SECTION 04 05 11
MORTAR AND MASONRY GROUT

PART 1 GENERAL

1.01 SECTION INCLUDES

A. Mortar for masonry.

B. Grout for masonry.

1.02 REFERENCE STANDARDS

A. ASTM C5 - Standard Specification for Quicklime for Structural Purposes; 2010.

B. ASTM C91/C91M - Standard Specification for Masonry Cement; 2012.

C. ASTM C144 - Standard Specification for Aggregate for Masonry Mortar; 2011.

D. ASTM C150/C150M - Standard Specification for Portland Cement; 2017.

E. ASTM C207 - Standard Specification for Hydrated Lime for Masonry Purposes; 2006 (Reapproved 2011).

F. ASTM C270 - Standard Specification for Mortar for Unit Masonry; 2014a.

G. ASTM C387/C387M - Standard Specification for Packaged, Dry, Combined Materials for Concrete and High Strength Mortar; 2015.

1.03 SUBMITTALS

A. See Section 01 30 00 - Administrative Requirements, for submittal procedures.

1.04 DELIVERY, STORAGE, AND HANDLING

A. Maintain packaged materials clean, dry, and protected against dampness, freezing, and foreign matter.

PART 2 PRODUCTS

2.01 MORTAR AND GROUT APPLICATIONS

A. At Contractor's option, mortar and grout may be field-mixed from packaged dry materials, made from factory premixed dry materials with addition of water only, or ready-mixed.

B. Mortar Mix Designs: ASTM C270, Property Specification.
   1. Exterior Repointing Mortar: Type N with maximum 2 percent ammonium stearate or calcium stearate per cement weight.

2.02 MATERIALS

A. Packaged Dry Material for Mortar for Unit Masonry: Premixed Portland cement, hydrated lime, and sand; complying with ASTM C387/C387M and capable of producing mortar of the specified strength in accordance with ASTM C270 with the addition of water only.
   1. Color: Standard gray.

B. Portland Cement: ASTM C150/C150M.
   1. Type: Type I - Normal; ASTM C150/C150M.
   2. Color: Standard gray.

C. Masonry Cement: ASTM C91/C91M.
   1. Type: Type N; ASTM C91/C91M.

D. Hydrated Lime: ASTM C207, Type S.

E. Quicklime: ASTM C5, non-hydraulic type.

F. Mortar Aggregate: ASTM C144.

G. Water: Clean and potable.

PART 3 EXECUTION

3.01 INSTALLATION

A. Install mortar and grout to requirements of section(s) in which masonry is specified.

B. Work grout into masonry cores and cavities to eliminate voids.

C. Do not install grout in lifts greater than 16 inches without consolidating grout by rodding.

D. Do not displace reinforcement while placing grout.

END OF SECTION

SECTION 05 50 00
METAL FABRICATIONS

PART 1 GENERAL

1.01 SECTION INCLUDES

A. Shop fabricated steel items.

1.02 SUBMITTALS

A. See Section 01 30 00 - Administrative Requirements, for submittal procedures.

B. Shop Drawings: Indicate profiles, sizes, connection attachments, reinforcing, anchorage, size and type of fasteners, and accessories. Include erection drawings, elevations, and details where applicable.

PART 2 PRODUCTS

2.01 MATERIALS - STEEL

A. Steel Sections: ASTM A36/A36M.

B. Plates: ASTM A283/A283M.

C. Bolts, Nuts, and Washers: ASTM A307, Grade A, plain.

D. Shop and Touch-Up Primer: SSPC-Paint 15, complying with VOC limitations of authorities having jurisdiction.

E. Touch-Up Primer for Galvanized Surfaces: SSPC-Paint 20, Type I - Inorganic, complying with VOC limitations of authorities having jurisdiction.

2.02 FABRICATION

A. Fit and shop assemble items in largest practical sections, for delivery to site.

B. Fabricate items with joints tightly fitted and secured.

C. Grind exposed joints flush and smooth with adjacent finish surface. Make exposed joints butt tight, flush, and hairline. Ease exposed edges to small uniform radius.

D. Exposed Mechanical Fastenings: Flush countersunk screws or bolts; unobtrusively located; consistent with design of component, except where specifically noted otherwise.

E. Supply components required for anchorage of fabrications. Fabricate anchors and related components of same material and finish as fabrication, except where specifically noted otherwise.

2.03 FABRICATED ITEMS

A. Ledge Angles, Shelf Angles, Channels, and Plates Not Attached to Structural Framing: For support of metal decking; prime paint finish.

B. Lintels: As detailed; prime paint finish.

2.04 FINISHES - STEEL

A. Prime Painting: One coat.

PART 3 EXECUTION

3.01 EXAMINATION

A. Verify that field conditions are acceptable and are ready to receive work.

3.02 PREPARATION

A. Clean and strip primed steel items to bare metal where site welding is required.

3.03 INSTALLATION

A. Install items plumb and level, accurately fitted, free from distortion or defects.

B. Provide for erection loads, and for sufficient temporary bracing to maintain true alignment until completion of erection and installation of permanent attachments.

C. Obtain approval prior to site cutting or making adjustments not scheduled.

END OF SECTION

SECTION 06 10 00
ROUGH CARPENTRY

PART 1 GENERAL

1.01 RELATED REQUIREMENTS

A. Section 07 62 00 - Sheet Metal Flashing and Trim: Sill flashings.

B. Section 07 72 00 - Roof Accessories: Prefabricated roof curbs.

C. Section 09 21 16 - Gypsum Board Assemblies: Gypsum-based sheathing.

1.02 SUBMITTALS

A. See Section 01 30 00 - Administrative Requirements, for submittal procedures.

1.03 DELIVERY, STORAGE, AND HANDLING

A. General: Cover wood products to protect against moisture. Support stacked products to prevent deformation and to allow air circulation.

B. Fire Retardant Treated Wood: Prevent exposure to precipitation during shipping, storage, or installation.

1.04 WARRANTY

A. See Section 01 78 00 - Closeout Submittals, for additional warranty requirements.

PART 2 PRODUCTS

2.01 GENERAL REQUIREMENTS

A. Dimension Lumber: Comply with PS 20 and requirements of specified grading agencies.
   1. If no species is specified, provide any species graded by the agency specified; if no grading agency is specified, provide lumber graded by any grading agency meeting the specified requirements.
   2. Grading Agency: Any grading agency whose rules are approved by the Board of Review, American Lumber Standard Committee (www.alsc.org) and who provides grading service for the species and grade specified; provide lumber stamped with grade mark unless otherwise indicated.

B. Lumber fabricated from old growth timber is not permitted.

2.02 DIMENSION LUMBER FOR CONCEALED APPLICATIONS

A. Sizes: Nominal sizes as indicated on drawings, S4S.

B. Moisture Content: S-dry or MC19.

C. Miscellaneous Framing, Blocking, Nailers, Grounds, and Furring:
   1. Lumber: S4S, No. 2 or Standard Grade.
   2. Boards: Standard or No. 3.

2.03 STRUCTURAL COMPOSITE LUMBER

A. At Contractor's option, structural composite lumber may be substituted for concealed dimension lumber and timbers.

B. Structural Composite Lumber: Factory fabricated beams, headers, and columns, of sizes and types indicated on drawings; structural capacity as published by manufacturer.

2.04 ACCESSORIES

A. Fasteners and Anchors:
   1. Metal and Finish: Hot-dipped galvanized steel complying with ASTM A153/A153M for high humidity and preservative-treated wood locations, unfinished steel elsewhere.

B. Sill Flashing: As specified in Section 07 62 00.

C. Building Paper: Water resistant Kraft paper.

2.05 FACTORY WOOD TREATMENT

A. Treated Lumber and Plywood: Comply with requirements of AWPA U1 - Use Category System for wood treatments determined by use categories, expected service conditions, and specific applications.
   1. Fire-Retardant Treated Wood: Mark each piece of wood with producer's stamp indicating compliance with specified requirements.

B. Fire Retardant Treatment:
   1. Interior Type A: AWPA U1, Use Category UCFA, Commodity Specification H, low temperature (low hygroscopic) type, chemically treated and pressure impregnated; capable of providing a maximum flame spread index of 25 when tested in accordance with ASTM E84, with no evidence of significant combustion when test is extended for an additional 20 minutes.
      a. Kiln dry wood after treatment to a maximum moisture content of 19 percent for lumber and 15 percent for plywood.
      b. Treat rough carpentry items as indicated .
      c. Do not use treated wood in applications exposed to weather or where the wood may become wet.

PART 3 EXECUTION

3.01 PREPARATION

A. Where wood framing bears on cementitious foundations, install full width sill flashing continuous over top of foundation, lap ends of flashing minimum of 4 inches and seal.

B. Coordinate installation of rough carpentry members specified in other sections.

3.02 INSTALLATION - GENERAL

A. Select material sizes to minimize waste.

B. Reuse scrap to the greatest extent possible; clearly separate scrap for use on site as accessory components, including: shims, bracing, and blocking.

C. Where treated wood is used on interior, provide temporary ventilation during and immediately after installation sufficient to remove indoor air contaminants.

3.03 BLOCKING, NAILERS, AND SUPPORTS

A. Provide framing and blocking members as indicated or as required to support finishes, fixtures, specialty items, and trim.

B. In framed assemblies that have concealed spaces, provide solid wood fireblocking as required by applicable local code, to close concealed draft openings between floors and between top story and roof/attic space; other material acceptable to code authorities may be used in lieu of solid wood blocking.

C. In metal stud walls, provide continuous blocking around door and window openings for anchorage of frames, securely attached to stud framing.

D. In walls, provide blocking attached to studs as backing and support for wall-mounted items, unless item can be securely fastened to two or more studs or other method of support is explicitly indicated.

E. Where ceiling-mounting is indicated, provide blocking and supplementary supports above ceiling, unless other method of support is explicitly indicated.

F. Provide the following specific non-structural framing and blocking:
   1. Cabinets and shelf supports.
   2. Wall brackets.
   3. Handrails.
   4. Grab bars.
   5. Towel and bath accessories.
   6. Wall-mounted door stops.

7. Chalkboards and marker boards.
8. Wall paneling and trim.
9. Joints of rigid wall coverings that occur between studs.

3.04 ROOF-RELATED CARPENTRY

A. Coordinate installation of roofing carpentry with deck construction, framing of roof openings, and roofing assembly installation.

B. Provide wood curb at all roof openings except where specifically indicated otherwise. Form corners by alternating lapping side members.

3.05 CLEANING

A. Waste Disposal: Comply with the requirements of Section 01 74 19 - Construction Waste Management and Disposal.
   1. Comply with applicable regulations.
   2. Do not burn scrap on project site.
   3. Do not burn scraps that have been pressure treated.
   4. Do not send materials treated with pentachlorophenol, CCA, or ACA to co-generation facilities or “waste-to-energy” facilities.

B. Do not leave any wood, shavings, sawdust, etc. on the ground or buried in fill.

C. Prevent sawdust and wood shavings from entering the storm drainage system.

END OF SECTION

SECTION 07 01 50.19
PREPARATION FOR RE-ROOFING

PART 1 GENERAL

1.01 SECTION INCLUDES

A. Replacement of existing roofing system in preparation for entire new roofing system.

B. Temporary roofing protection.

1.02 ADMINISTRATIVE REQUIREMENTS

A. Coordinate with affected mechanical and electrical work associated with roof penetrations.

B. Preinstallation Meeting: Convene one week before starting work of this section.
   1. Attendees:

C. Schedule work to coincide with commencement of installation of new roofing system.

1.03 FIELD CONDITIONS

A. Do not remove existing roofing membrane when weather conditions threaten the integrity of building contents or intended continued occupancy.

B. Maintain continuous temporary protection prior to and during installation of new roofing system.

PART 2 PRODUCTS

2.01 COMPONENTS

A. Refer to following sections for additional information on components relating to this work:

2.02 MATERIALS

A. Temporary Roofing Protection Materials:

PART 3 EXECUTION

3.01 EXAMINATION

A. Verify that existing roof surface has been cleared of materials being removed from existing roofing system and ready for next phase of work as required.

3.02 PREPARATION

A. Sweep roof surface clean of loose matter.

B. Remove loose refuse and dispose of properly off-site.

3.03 MATERIAL REMOVAL

A. Remove only existing roofing materials that can be replaced with new materials the same day.

B. Remove metal counter flashings.

C. Remove roofing membrane, perimeter base flashings, flashings around roof protrusions, pitch pans and pockets.

D. Remove damaged insulation and fasteners, cant strips, blocking, and crickets.

E. Repair existing wood deck surface to provide smooth working surface for new roof system.

3.04 INSTALLATION

3.05 PROTECTION

A. Provide temporary protective sheeting over uncovered deck surfaces.

B. Turn sheeting up and over parapets and curbing. Retain sheeting in position with weights.

C. Provide for surface drainage from sheeting to existing drainage facilities.

D. Do not permit traffic over unprotected or repaired deck surface.

3.06 SCHEDULES

END OF SECTION

SECTION 07 54 23
THERMOPLASTIC-POLYOLEFIN ROOFING (TPO)

PART 1 GENERAL

1.01 SECTION INCLUDES

A. Thermoplastic membrane roofing system, including all components specified.

B. Comply with the published recommendations and instructions of the roofing membrane manufacturer, at http://manual.fsbp.com.

C. Commencement of work by Contractor shall constitute acknowledgement by Contractor that this specification can be satisfactorily executed, under the project conditions and with all necessary prerequisites for warranty acceptance by roofing membrane manufacturer. No modification of the Contract Sum will be made for failure to adequately examine the Contract Documents or the project conditions.

1.02 RELATED REQUIREMENTS

A. Section 06 10 00 - Rough Carpentry: Wood nailers associated with roofing and roof insulation.

B. Section 07 62 00 - Sheet Metal Flashing and Trim: Formed metal flashing and trim items associated with roofing.

C. Section 07 72 00 - Roof Accessories: Roof hatches, vents, and manufactured curbs.

1.03 REFERENCE STANDARDS

A. ANSI/SPRI/FM 4435/ES-1 - Test Standard for Edge Systems Used with Low Slope Roofing Systems; 2017.

B. ASTM C1177/C1177M - Standard Specification for Glass Mat Gypsum Substrate for Use as Sheathing; 2013.

C. ASTM C1549 - Standard Test Method for Determination of Solar Reflectance Near Ambient Temperature Using a Portable Solar Reflectometer; 2016.

D. ASTM D638 - Standard Test Method for Tensile Properties of Plastics; 2014.

E. ASTM D1004 - Standard Test Method for Tear Resistance (Graves Tear) of Plastic Film and Sheeting; 2013.

F. ASTM D6878/D6878M - Standard Specification for Thermoplastic Polyolefin Based Sheet Roofing; 2017.

G. FM (AG) - FM Approval Guide; current edition.

H. FM 4470 - Approval Standard for Single-Ply, Polymer-Modified Bitumen Sheet, Built-Up Roof (BUR) and Liquid Applied Roof Assemblies for use in Class 1 and Noncombustible Roof Deck Construction; 2016.

I. FM DS 1-28 - Wind Design; 2016.

J. FM DS 1-29 - Roof Deck Securement and Above-Deck Roof Components; Factory Mutual System; 2016.

K. PS 1 - Structural Plywood; 2009.

1.04 ADMINISTRATIVE REQUIREMENTS

A. Pre-Installation Conference: Before start of roofing work, Contractor shall hold a meeting to discuss the proper installation of materials and requirements to achieve the warranty.
   1. Require attendance with all parties directly influencing the quality of roofing work or affected by the performance of roofing work.
   2. Notify Architect well in advance of meeting.

1.05 SUBMITTALS

A. See Section 01 30 00 - Administrative Requirements, for submittal procedures.

B. Product Data:

1. Provide membrane manufacturer's printed data sufficient to show that all components of roofing system, including insulation and fasteners, comply with the specified requirements and with the membrane manufacturer's requirements and recommendations for the system type specified; include data for each product used in conjunction with roofing membrane.

C. Samples: Submit samples of each product to be used.

D. Shop Drawings: Provide:
1. The roof membrane manufacturer's standard details customized for this project for all relevant conditions, including flashings, base tie-ins, roof edges, terminations, expansion joints, penetrations, and drains.

E. Installer Qualifications: Letter from manufacturer attesting that the roofing installer meets the specified qualifications.

F. Executed Warranty.

1.06 QUALITY ASSURANCE

A. Installer Qualifications: Roofing installer shall have the following:
1. At least five years experience in installing specified system.
2. Capability to provide payment and performance bond to building owner.
3. Capability to provide a payment performance bond.

1.07 DELIVERY, STORAGE AND HANDLING

A. Deliver products in manufacturer's original containers, dry and undamaged, with seals and labels intact and legible.

B. Store materials clear of ground and moisture with weather protective covering.

C. Keep combustible materials away from ignition sources.

1.08 WARRANTY

A. See Section 01 78 00 - Closeout Submittals, for additional warranty requirements.

B. Comply with all warranty procedures required by manufacturer, including notifications, scheduling, and inspections.

C. Warranty: Firestone Limited Warranty covering membrane, roof insulation, and other indicated components of the system, for the term indicated.
1. Limit of Liability: Twenty (20) years, No dollar limitation.
2. Scope of Coverage: Repair leaks in the roofing system caused by:
   a. Ordinary wear and tear of the elements.
   b. Manufacturing defect in Firestone brand materials.
   c. Defective workmanship used to install these materials.
   d. Damage due to winds up to 55 mph.
3. Not Covered:
   a. Damage due to winds in excess of 55 mph.
   b. Damage due hurricanes or tornadoes.
   c. Intentional damage.
   d. Unintentional damage due to normal rooftop inspections, maintenance, or service.

PART 2 PRODUCTS

2.01 MANUFACTURERS

A. Acceptable Manufacturer - Roofing System: Firestone Building Products LLC, Carmel, IN: www.firestonebpco.com.
1. Roofing systems manufactured by others are acceptable provided the roofing system is completely equivalent in materials and warranty conditions and the manufacturer meets the following qualifications:
   a. Specializing in manufacturing the roofing system to be provided.

B. Substitutions: See Section 01 60 00 - Product Requirements.

1. Submit evidence that the proposed substitution complies with the specified requirements.

2.02 ROOFING SYSTEM DESCRIPTION

A. Roofing System: Thermoplastic polyolefin (TPO) single-ply membrane.
   1. Membrane Attachment: Fully adhered.
   2. Warranty: Full system warranty; Firestone 20 year Red Shield Limited Warranty covering membrane, roof insulation, and membrane accessories.
   3. Comply with applicable local building code requirements.
   4. Provide assembly complying with Factory Mutual Corporation (FM) Roof Assembly Classification, FM DS 1-28 and FM DS 1-29, and meeting minimum requirements of FM 1-90 wind uplift rating.

B. Roofing System Components: Listed in order from the top of the roof down:
   1. Membrane: Thickness as specified.
   2. Base Sheet Over Insulation: Mechanically attached.
   3. Insulation:
      a. Maximum Board Thickness: 3 inches; use as many layers as necessary; stagger joints in adjacent layers.

2.03 MEMBRANE MATERIALS

A. Membrane: Flexible, heat weldable sheet composed of thermoplastic polyolefin polymer and ethylene propylene rubber; complying with ASTM D6878/D6878M, with polyester weft inserted reinforcement and the following additional characteristics:
   1. Thickness: 0.060 inch plus/minus 10 percent, with coating thickness over reinforcement of 0.024 inch plus/minus 10 percent.
   2. Puncture Resistance: 265 lbf, minimum, when tested in accordance FTM 101C Method 2031.
   3. Solar Reflectance: 0.79, minimum, when tested in accordance with ASTM C1549.
   4. Color: White.

B. Membrane Fasteners: Type and size as required by roof membrane manufacturer for roofing system and warranty to be provided; use only fasteners furnished by roof membrane manufacturer.

C. Curb and Parapet Flashing: Same material as membrane, with encapsulated edge which eliminates need for seam sealing the flashing-to-roof splice; precut to 18 inches wide.

D. Formable Flashing: Non-reinforced, flexible, heat weldable sheet, composed of thermoplastic polyolefin polymer and ethylene propylene rubber.
   1. Thickness: 0.060 inch plus/minus 10 percent.
   2. Tensile Strength: 1550 psi, minimum, when tested in accordance with ASTM D638 after heat aging.
   3. Elongation at Break: 650 percent, minimum, when tested in accordance with ASTM D638 after heat aging.
   4. Tearing Strength: 12 lbf, minimum, when tested in accordance with ASTM D1004 after heat aging.
   5. Color: White.
   6. Acceptable Product: UltraPly TPO Flashing by Firestone.

E. Tape Flashing: 5-1/2 inch nominal wide TPO membrane laminated to cured rubber polymer seaming tape, overall thickness 0.065 inch nominal; TPO QuickSeam Flashing by Firestone.

F. Pourable Sealer: Two-part polyurethane, two-color for reliable mixing; Pourable Sealer by Firestone.

G. Seam Plates: Steel with barbs and Galvalume coating; corrosion-resistance complying with FM 4470.

H. Cut Edge Sealant: Synthetic rubber-based, for use where membrane reinforcement is exposed; UltraPly TPO Cut Edge Sealant by Firestone.

I. General Purpose Sealant: EPDM-based, one part, white general purpose sealant; UltraPly TPO General Purpose Sealant by Firestone.

J. Molded Flashing Accessories: Unreinforced TPO membrane pre-molded to suit a variety of flashing details, including pipe boots, inside corners, outside corners, etc.; UltraPly TPO Small and Large Pipe Flashing by Firestone.

K. Roof Walkway Pads: Non-reinforced TPO walkway pads, 0.130 inch by 30 inches by 40 feet long with patterned traffic bearing surface; UltraPly TPO Walkway Pads by Firestone.

PART 3 INSTALLATION

3.01 GENERAL

A. Install roofing, insulation, flashings, and accessories in accordance with roofing manufacturer's published instructions and recommendations for the specified roofing system. Where manufacturer provides no instructions or recommendations, follow good roofing practices and industry standards. Comply with federal, state, and local regulations.

B. Obtain all relevant instructions and maintain copies at project site for duration of installation period.

C. Do not start work until Pre-Installation Notice has been submitted to manufacturer as notification that this project requires a manufacturer's warranty.

D. Perform work using competent and properly equipped personnel.

E. Temporary closures, which ensure that moisture does not damage any completed section of the new roofing system, are the responsibility of the applicator. Completion of flashings, terminations, and temporary closures shall be completed as required to provide a watertight condition.

F. Install roofing membrane only when surfaces are clean, dry, smooth and free of snow or ice; do not apply roofing membrane during inclement weather or when ambient conditions will not allow proper application; consult manufacturer for recommended procedures during cold weather. Do not work with sealants and adhesives when material temperature is outside the range of 60 to 80 degrees F.

G. Protect adjacent construction, property, vehicles, and persons from damage related to roofing work; repair or restore damage caused by roofing work.
   1. Protect from spills and overspray from bitumen, adhesives, sealants and coatings.
   2. Particularly protect metal, glass, plastic, and painted surfaces from bitumen, adhesives, and sealants within the range of wind-borne overspray.
   3. Protect finished areas of the roofing system from roofing related work traffic and traffic by other trades.

H. Until ready for use, keep materials in their original containers as labeled by the manufacturer.

I. Consult membrane manufacturer's instructions, container labels, and Material Safety Data Sheets (MSDS) for specific safety instructions. Keep all adhesives, sealants, primers and cleaning materials away from all sources of ignition.

3.02 EXAMINATION

A. Examine roof deck to determine that it is sufficiently rigid to support installers and their mechanical equipment and that deflection will not strain or rupture roof components or deform deck.

B. Verify that surfaces and site conditions are ready to receive work. Correct defects in the substrate before commencing with roofing work.

C. Examine roof substrate to verify that it is properly sloped to drains.

D. Verify that the specifications and drawing details are workable and not in conflict with the roofing manufacturer's recommendations and instructions; start of work constitutes acceptable of project conditions and requirements.

3.03 PREPARATION

A. Take appropriate measures to ensure that fumes from adhesive solvents are not drawn into the building through air intakes.

B. Prior to proceeding, prepare roof surface so that it is clean, dry, and smooth, and free of sharp edges, fins, roughened surfaces, loose or foreign materials, oil, grease and other materials that may damage the membrane.

C. Fill all surface voids in the immediate substrate that are greater than 1/4 inch wide with fill material acceptable insulation to membrane manufacturer.

D. Seal, grout, or tape deck joints, where needed, to prevent bitumen seepage into building.

3.04 SINGLE-PLY MEMBRANE INSTALLATION

A. Beginning at low point of roof, place membrane without stretching over substrate and allow to relax at least 30 minutes before attachment or splicing; in colder weather allow for longer relax time.

B. Lay out the membrane pieces so that field and flashing splices are installed to shed water.

C. Install membrane without wrinkles and without gaps or fishmouths in seams; bond and test seams and laps in accordance with membrane manufacturer's instructions and details.

D. Install membrane adhered to the substrate, with edge securement as specified.

E. Adhered Membrane: Bond membrane sheet to substrate using membrane manufacturer's recommended bonding material, application rate, and procedures.

F. Edge Securement: Secure membrane at all locations where membrane terminates or goes through an angle change greater than 2 in 12 inches using mechanically fastened reinforced perimeter fastening strips, plates, or metal edging as indicated or as recommended by roofing manufacturer.
   1. Exceptions: Round pipe penetrations less than 18 inches in diameter and square penetrations less than 4 inches square.
   2. Metal edging is not merely decorative; ensure anchorage of membrane as intended by roofing manufacturer.

3.05 FLASHING AND ACCESSORIES INSTALLATION

A. Install flashings, including laps, splices, joints, bonding, adhesion, and attachment, as required by membrane manufacturer's recommendations and details.

B. Metal Accessories: Install metal edgings, gravel stops, and copings in locations indicated on the drawings, with horizontal leg of edge member over membrane and flashing over metal onto membrane.
   1. Follow roofing manufacturer's instructions.
   2. Remove protective plastic surface film immediately before installation.
   3. Install water block sealant under the membrane anchorage leg.
   4. Flash with manufacturer's recommended flashing sheet unless otherwise indicated.
   5. Where single application of flashing will not completely cover the metal flange, install additional piece of flashing to cover the metal edge.
   6. If the roof edge includes a gravel stop and sealant is not applied between the laps in the metal edging, install an additional piece of self-adhesive flashing membrane over the metal lap to the top of the gravel stop; apply seam edge treatment at the intersections of the two flashing sections.
   7. When the roof slope is greater than 1:12, apply seam edge treatment along the back edge of the flashing.

3.06 FINISHING AND WALKWAY INSTALLATION

A. Install walkways at access points to the roof, around rooftop equipment that may require maintenance, and where indicated on the drawings.

B. Walkway Pads: Adhere to the roofing membrane, spacing each pad at minimum of 1.0 inch and maximum of 3.0 inches from each other to allow for drainage.
   1. If installation of walkway pads over field fabricated splices or within 6 inches of a splice edge cannot be avoided, adhere another layer of flashing over the splice and extending beyond the walkway pad a minimum of 6 inches on either side.
   2. Prime the membrane, remove the release paper on the pad, press in place, and walk on pad to ensure proper adhesion.

3.07 FIELD QUALITY CONTROL

A. Inspection by Manufacturer: Provide final inspection of the roofing system by a Technical Representative employed by roofing system manufacturer specifically to inspect installation for warranty purposes (i.e. not a sales person).

B. Perform all corrections necessary for issuance of warranty.

3.08 CLEANING

A. Clean all contaminants generated by roofing work from building and surrounding areas, including bitumen, adhesives, sealants, and coatings.

B. Repair or replace building components and finished surfaces damaged or defaced due to the work of this section; comply with recommendations of manufacturers of components and surfaces.

C. Remove leftover materials, trash, debris, equipment from project site and surrounding areas.

3.09 PROTECTION

A. Where construction traffic must continue over finished roof membrane, provide durable protection and replace or repair damaged roofing to original condition.

END OF SECTION

SECTION 07 62 00
SHEET METAL FLASHING AND TRIM

PART 1 GENERAL

1.01 SECTION INCLUDES

A. Fabricated sheet metal items, including flashings, counterflashings, and other items indicated in Schedule.

B. Sealants for joints within sheet metal fabrications.

1.02 RELATED REQUIREMENTS

A. Section 06 10 00 - Rough Carpentry: Field fabricated roof curbs.

1.03 REFERENCE STANDARDS

A. AAMA 2605 - Voluntary Specification, Performance Requirements and Test Procedures for Superior Performing Organic Coatings on Aluminum Extrusions and Panels (with Coil Coating Appendix); 2017a.

B. ASTM A653/A653M - Standard Specification for Steel Sheet, Zinc-Coated (Galvanized) or Zinc-Iron Alloy-Coated (Galvannealed) by the Hot-Dip Process; 2017.

C. SMACNA (ASMM) - Architectural Sheet Metal Manual; 2012.

1.04 SUBMITTALS

A. See Section 01 30 00 - Administrative Requirements, for submittal procedures.

1.05 QUALITY ASSURANCE

A. Perform work in accordance with SMACNA (ASMM) and CDA A4050 requirements and standard details, except as otherwise indicated.

PART 2 PRODUCTS

2.01 SHEET MATERIALS

A. Galvanized Steel: ASTM A653/A653M, with G90/Z275 zinc coating; minimum 24 gage, (0.0239 inch) thick base metal.

B. Pre-Finished Galvanized Steel: ASTM A653/A653M, with G90/Z275 zinc coating; minimum 24 gage, (0.0239) inch thick base metal, shop pre-coated with PVDF coating.
   1. PVDF (Polyvinylidene Fluoride) Coating: Superior Performance Organic Finish, AAMA 2605; multiple coat, thermally cured fluoropolymer finish system.
   2. Color: As selected by Architect from manufacturer's standard colors.

2.02 FABRICATION

A. Form sections true to shape, accurate in size, square, and free from distortion or defects.

B. Form pieces in longest possible lengths.

C. Hem exposed edges on underside 1/2 inch; miter and seam corners.

D. Form material with flat lock seams, except where otherwise indicated; at moving joints, use sealed lapped, bayonet-type or interlocking hooked seams.

E. Fabricate corners from one piece with minimum 18 inch long legs; seam for rigidity, seal with sealant.

F. Fabricate flashings to allow toe to extend 2 inches over roofing gravel. Return and brake edges.

PART 3 EXECUTION

3.01 EXAMINATION

A. Verify roof openings, curbs, pipes, sleeves, ducts, and vents through roof are solidly set, reglets in place, and nailing strips located.

B. Verify roofing termination and base flashings are in place, sealed, and secure.

3.02 PREPARATION

A. Install surface mounted reglets true to lines and levels, and seal top of reglets with sealant.

B. Back paint concealed metal surfaces with protective backing paint to a minimum dry film thickness of 15 mil.

3.03 INSTALLATION

A. Secure flashings in place using concealed fasteners, and use exposed fasteners only where permitted..

B. Apply plastic cement compound between metal flashings and felt flashings.

C. Fit flashings tight in place; make corners square, surfaces true and straight in planes, and lines accurate to profiles.

3.04 FIELD QUALITY CONTROL

A. See Section 01 40 00 - Quality Requirements, for field inspection requirements.

B. Inspection will involve surveillance of work during installation to ascertain compliance with specified requirements.

3.05 SCHEDULE

A. Coping, Cap, Parapet, Sill and Ledge Flashings: Galvanized sheet steel.

B. Counterflashings at Curb-Mounted Roof Items, including skylights and roof hatches: Galvanized sheet steel.

C. Roofing Penetration Flashings, for Pipes, Structural Steel, and Equipment Supports: Galvanized sheet steel.

END OF SECTION

SECTION 07 72 00
ROOF ACCESSORIES

PART 1 GENERAL

1.01 SECTION INCLUDES

A. Curbs.

B. Equipment rails.

C. Roof penetrations mounting curbs.

1.02 SUBMITTALS

A. See Section 01 30 00 - Administrative Requirements, for submittal procedures.

B. Product Data: Manufacturer's data sheets on each product to be used.
   1. Preparation instructions and recommendations.
   2. Storage and handling requirements and recommendations.
   3. Installation methods.
   4. Maintenance requirements.

C. Shop Drawings: Submit detailed layout developed for this project and provide dimensioned location and number for each type of roof accessory.
   1. Non-penetrating Rooftop Supports: Submit design calculations for loadings and spacings.
   2. Submit shop drawings sealed and signed by a Professional Engineer experienced in design of this type of work and licensed in New Mexico.

D. Warranty Documentation:
   1. Submit manufacturer warranty.
   2. Ensure that forms have been completed in Owner's name and registered with manufacturer.
   3. Submit documentation that roof accessories are acceptable to roofing manufacturer, and do not limit the roofing warranty.

1.03 WARRANTY

A. See Section 01 78 00 - Closeout Submittals, for additional warranty requirements.

PART 2 PRODUCTS

2.01 ROOF CURBS

A. Manufacturers:
   1. AES Industries Inc: www.aescurb.com.
   2. The Pate Company: www.patecurbs.com.
   3. Roof Products & Systems (RPS): www.rpscurbs.com.

B. Roof Curbs Mounting Assemblies: Factory fabricated hollow sheet metal construction, internally reinforced, and capable of supporting superimposed live and dead loads and designated equipment load with fully mitered and sealed corner joints welded or mechanically fastened, and integral counterflashing with top and edges formed to shed water.
   1. Roof Curb Mounting Substrate: Curb substrate consists of standing seam metal roof panel system.
   2. Sheet Metal Material:
      a. Aluminum: 0.080 inch minimum thickness, with 3003 alloy, and H14 temper.
   3. Roofing Cants: Provide integral sheet metal roofing cants dimensioned to begin slope at top of roofing system at 1:1 slope; minimum cant height 4 inches.
   4. Fabricate curb bottom and mounting flanges for installation directly on metal roof panel system to match slope and configuration of system.
      a. Extend side flange to next adjacent roof panel seam and comply with seam configurations and seal connection, providing at least 6 inch clearance between curb and metal roof panel flange allowing water to properly flow past curb.

b. Where side of curb aligns with metal roof panel flange, attach fasteners on upper slope of flange to curb connection allowing water to flow past below fasteners, and seal connection.
c. Maintain at least 12 inch clearance from curb, and lap upper curb flange on underside of down sloping metal roof panel, and seal connection.
d. Lap lower curb flange overtop of down sloping metal roof panel and seal connection.

5. Provide layouts and configurations indicated on drawings.

C. Curbs Adjacent to Roof Openings: Provide curb on each side of opening, with top of curb horizontal for equipment mounting.
1. Provide preservative treated wood nailers along top of curb.
2. Insulate inside curbs with 1-1/2 inch thick fiberglass insulation.

D. Equipment Rail Curbs: Straight curbs on each side of equipment, with top of curbs horizontal and level with each other for equipment mounting.

E. Pipe, Duct, or Conduit Mounting Curbs: Vertical posts, minimum 8 inches square unless otherwise indicated.

2.02 ROOF HATCHES AND VENTS, MANUAL AND AUTOMATIC OPERATION

A. Frames and Curbs: One-piece curb and frame with integral cap flashing to receive roof flashings; extended bottom flange to suit mounting.
1. Insulation: Manufacturer's standard; 1 inch rigid glass fiber, located on outside face of curb.
2. Curb Height: 12 inches from finished surface of roof, minimum.

B. Safety Railing System: Manufacturer's standard accessory safety rail system mounted directly to curb.
1. Comply with 29 CFR 1910.23, with a safety factor of two.
2. Gate: Same material as railing; automatic closing with latch.
3. Finish: Manufacturer's standard, factory applied finish.
4. Fasteners: Stainless steel, Type 316.
5. Manufacturers:
a. BILCO Company; Bil-Guard 2.0: www.bilco.com/#sle.
b. Substitutions: See Section 01 60 00 - Product Requirements.

C. Hardware: Steel, zinc coated and chromate sealed, unless otherwise indicated or required by manufacturer.
1. Lifting Mechanisms: Compression or torsion spring operator with shock absorbers that automatically opens upon release of latch; capable of lifting covers despite 10 psf load.
2. Hinges: Heavy duty pintle type.
3. Hold open arm with vinyl-coated handle for manual release.
4. Latch: Upon closing, engage latch automatically and reset manual release.
5. Manual Release: Pull handle on interior.
6. Locking: Padlock hasp on interior.

2.03 NON-PENETRATING ROOFTOP SUPPORTS/ASSEMBLIES

A. Manufacturers:

B. Non-Penetrating Rooftop Support/Assemblies: Manufacturer-engineered and factory-fabricated, with pedestal bases that rest on top of roofing membrane, and not requiring any attachment to roof structure and not penetrating roofing assembly.
1. Design Loadings and Configurations: As required by applicable codes.
2. Support Spacing and Base Sizes: As required to distribute load sufficiently to prevent indentation of roofing assembly.
3. Steel Components: Stainless steel, or carbon steel hot-dip galvanized after fabrication in accordance with ASTM A123/A123M.
4. Hardware, Bolts, Nuts, and Washers: Stainless steel, or carbon steel hot-dip galvanized after fabrication in accordance with ASTM A153/A153M.
5. Manufacturers:

a. Metal Roof Innovations, Ltd. S-5! Attachment Solutions; S-5! Utility System: www.s-5.com/#sle.
b. Portals Plus: www.portalsplus.com/#sle.
c. Substitutions: See Section 01 60 00 - Product Requirements.

PART 3 EXECUTION

3.01 EXAMINATION

A. Do not begin installation until substrates have been properly prepared.

B. If substrate preparation is the responsibility of another installer, notify Architect of unsatisfactory preparation before proceeding.

3.02 INSTALLATION

A. Install in accordance with manufacturer's instructions, in manner that maintains roofing system weather-tight integrity.

3.03 CLEANING

A. Clean installed work to like-new condition.

3.04 PROTECTION

A. Protect installed products until completion of project.

B. Touch-up, repair or replace damaged products before Date of Substantial Completion.

END OF SECTION

SECTION 07 92 00
JOINT SEALANTS

PART 1 GENERAL

1.01 RELATED REQUIREMENTS

A. Section 08 71 00 - Door Hardware: Setting exterior door thresholds in sealant.

B. Section 08 80 00 - Glazing: Glazing sealants and accessories.

C. Section 09 21 16 - Gypsum Board Assemblies: Sealing acoustical and sound-rated walls and ceilings.

1.02 SUBMITTALS

A. See Section 01 30 00 - Administrative Requirements, for submittal procedures.

B. Product Data for Sealants: Submit manufacturer's technical data sheets for each product to be used, that includes the following.
   1. Physical characteristics, including movement capability, VOC content, hardness, cure time, and color availability.
   2. List of backing materials approved for use with the specific product.
   3. Substrates that product is known to satisfactorily adhere to and with which it is compatible.
   4. Substrates the product should not be used on.

PART 2 PRODUCTS

2.01 MANUFACTURERS

A. Non-Sag Sealants: Permits application in joints on vertical surfaces without sagging or slumping.
   1. Adhesives Technology Corporation: www.atcepoxy.com/#sle.
   2. BASF Construction Chemicals-Building Systems: www.buildingsystems.basf.com.
   3. Dow Corning Corporation: www.dowcorning.com/construction/#sle.
   4. Sika Corporation: www.usa-sika.com/#sle.
   5. Substitutions: See Section 01 60 00 - Product Requirements.

2.02 JOINT SEALANT APPLICATIONS

A. Scope:
   1. Exterior Joints: Seal open joints, whether or not the joint is indicated on drawings, unless specifically indicated not to be sealed. Exterior joints to be sealed include, but are not limited to, the following items.
      a. Joints between door, window, and other frames and adjacent construction.
      b. Joints between different exposed materials.
      c. Openings below ledge angles in masonry.
      d. Other joints indicated below.
   2. Interior Joints: Do not seal interior joints unless specifically indicated to be sealed. Interior joints to be sealed include, but are not limited to, the following items.
      a. Joints between door, window, and other frames and adjacent construction.
      b. Other joints indicated below.
   3. Do not seal the following types of joints.
      a. Intentional weepholes in masonry.
      b. Joints indicated to be treated with manufactured expansion joint cover or some other type of sealing device.
      c. Joints where sealant is specified to be provided by manufacturer of product to be sealed.
      d. Joints where installation of sealant is specified in another section.
      e. Joints between suspended panel ceilings/grid and walls.

B. Exterior Joints: Use non-sag non-staining silicone sealant, unless otherwise indicated.

C. Interior Joints: Use non-sag polyurethane sealant, unless otherwise indicated.

1. Wall and Ceiling Joints in Non-Wet Areas: Acrylic emulsion latex sealant.

D. Interior Wet Areas: Bathrooms, restrooms, kitchens, food service areas, and food processing areas; fixtures in wet areas include plumbing fixtures, food service equipment, countertops, cabinets, and other similar items.

2.03 NONSAG JOINT SEALANTS

A. Non-Staining Silicone Sealant: ASTM C920, Grade NS, Uses M and A; not expected to withstand continuous water immersion or traffic.
   1. Non-Staining To Porous Stone: Non-staining to light-colored natural stone when tested in accordance with ASTM C1248.
   2. Dirt Pick-Up: Reduced dirt pick-up compared to other silicone sealants.
   3. Color: To be selected by Architect from manufacturer's standard range.
   4. Manufacturers:
      a. Dow Chemical Company; 756 SMS Building Sealant: consumer.dow.com/en-us/industry/ind-building-construction.html/#sle.
      b. Dow Chemical Company; 790 Silicone Building Sealant: consumer.dow.com/en-us/industry/ind-building-construction.html/#sle.
      c. Sika Corporation; Sikasil WS-290: www.usa-sika.com/#sle.
      d. Substitutions: See Section 01 60 00 - Product Requirements.

B. Polyurethane Sealant: ASTM C920, Grade NS, Uses M and A; single or multi-component; not expected to withstand continuous water immersion or traffic.
   1. Movement Capability: Plus and minus 25 percent, minimum.

C. Epoxy Sealant: ASTM C920, Grade NS, Uses M and A; single or multi-component; not expected to withstand continuous water immersion or traffic.
   1. Hardness Range: 65 to 75, Shore A, when tested in accordance with ASTM C661.
   2. Color: To be selected by Architect from manufacturer's standard range.

D. Acrylic Emulsion Latex: Water-based; ASTM C834, single component, non-staining, non-bleeding, non-sagging; not intended for exterior use.
   1. Color: To be selected by Architect from manufacturer's standard range.
   2. Manufacturers:
      a. Franklin International, Inc; Titebond GREENchoice Acoustical Smoke & Sound Sealant: www.titebond.com/#sle.
      b. Sherwin-Williams Company; White Lightning 3006 Siliconized Acrylic Latex Caulk: www.sherwin-williams.com/#sle.
      c. Substitutions: See Section 01 60 00 - Product Requirements.

2.04 ACCESSORIES

A. Backer Rod: Cylindrical cellular foam rod with surface that sealant will not adhere to, compatible with specific sealant used, and recommended by backing and sealant manufacturers for specific application.
   1. Manufacturers:
      a. Nomaco, Inc; HBR: www.nomaco.com/#sle.
      b. Substitutions: See Section 01 60 00 - Product Requirements.

B. Backing Tape: Self-adhesive polyethylene tape with surface that sealant will not adhere to and recommended by tape and sealant manufacturers for specific application.

C. Primers: Type recommended by sealant manufacturer to suit application; non-staining.

PART 3 EXECUTION

3.01 EXAMINATION

A. Verify that joints are ready to receive work.

B. Verify that backing materials are compatible with sealants.

C. Verify that backer rods are of the correct size.

3.02 PREPARATION

A. Remove loose materials and foreign matter that could impair adhesion of sealant.

B. Clean joints, and prime as necessary, in accordance with manufacturer's instructions.

C. Perform preparation in accordance with manufacturer's instructions and ASTM C1193.

D. Mask elements and surfaces adjacent to joints from damage and disfigurement due to sealant work; be aware that sealant drips and smears may not be completely removable.

3.03 INSTALLATION

A. Perform work in accordance with sealant manufacturer's requirements for preparation of surfaces and material installation instructions.

B. Perform installation in accordance with ASTM C1193.

C. Measure joint dimensions and size joint backers to achieve the following, unless otherwise indicated:
   1. Width/depth ratio of 2:1.
   2. Neck dimension no greater than 1/3 of the joint width.
   3. Surface bond area on each side not less than 75 percent of joint width.

D. Install bond breaker backing tape where backer rod cannot be used.

E. Install sealant free of air pockets, foreign embedded matter, ridges, and sags, and without getting sealant on adjacent surfaces.

F. Do not install sealant when ambient temperature is outside manufacturer's recommended temperature range, or will be outside that range during the entire curing period, unless manufacturer's approval is obtained and instructions are followed.

G. Nonsag Sealants: Tool surface concave, unless otherwise indicated; remove masking tape immediately after tooling sealant surface.

END OF SECTION

SECTION 08 12 13
HOLLOW METAL FRAMES

PART 1 GENERAL

1.01 SECTION INCLUDES

A. Non-fire-rated hollow metal frames for non-hollow metal doors.

1.02 RELATED REQUIREMENTS

A. Section 08 14 16 - Flush Wood Doors: Non-hollow metal door for hollow metal frames.

B. Section 08 71 00 - Door Hardware: Hardware, silencers, and weatherstripping.

C. Section 09 91 23 - Interior Painting: Field painting.

1.03 REFERENCE STANDARDS

A. ADA Standards - Americans with Disabilities Act (ADA) Standards for Accessible Design; 2010.

B. ANSI/SDI A250.4 - Test Procedure and Acceptance Criteria for Physical Endurance for Steel Doors, Frames and Frame Anchors; 2011.

C. ANSI/SDI A250.8 - Specifications for Standard Steel Doors and Frames (SDI-100); 2014.

D. ASTM A653/A653M - Standard Specification for Steel Sheet, Zinc-Coated (Galvanized) or Zinc-Iron Alloy-Coated (Galvannealed) by the Hot-Dip Process; 2017.

E. ASTM A1008/A1008M - Standard Specification for Steel, Sheet, Cold-Rolled, Carbon, Structural, High-Strength Low-Alloy, High-Strength Low-Alloy with Improved Formability, Solution Hardened, and Bake Hardenable; 2016.

F. ASTM A1011/A1011M - Standard Specification for Steel, Sheet and Strip, Hot-Rolled, Carbon, Structural, High-Strength Low-Alloy, High-Strength Low-Alloy with Improved Formability, and Ultra-High Strength; 2017.

G. BHMA A156.115 - American National Standard for Hardware Preparation in Steel Doors and Steel Frames; 2016.

H. ICC A117.1 - Accessible and Usable Buildings and Facilities; 2017.

I. NAAMM HMMA 830 - Hardware Selection for Hollow Metal Doors and Frames; 2002.

J. NAAMM HMMA 831 - Hardware Locations for Hollow Metal Doors and Frames; 2011.

K. NAAMM HMMA 840 - Guide Specifications for Installation and Storage of Hollow Metal Doors and Frames; 2007.

1.04 SUBMITTALS

A. See Section 01 30 00 - Administrative Requirements for submittal procedures.

B. Product Data: Materials and details of design and construction, hardware locations, reinforcement type and locations, anchorage and fastening methods, and finishes; and one copy of referenced grade standard.

C. Shop Drawings: Details of each opening, showing elevations, glazing, frame profiles, and identifying location of different finishes, if any.

1.05 DELIVERY, STORAGE, AND HANDLING

A. Store in accordance with applicable requirements and in compliance with standards and/or custom guidelines as indicated.

PART 2 PRODUCTS

2.01 MANUFACTURERS

A. Hollow Metal Frames with Integral Casings:
   1. Ceco Door, an Assa Abloy Group company: www.assaabloydss.com.
   2. Curries, an Assa Abloy Group company: www.assaabloydss.com.
   3. Fleming Door Products, an Assa Abloy Group company: www.assaabloydss.com.
   4. Substitutions: See Section 01 60 00 - Product Requirements.

2.02 DESIGN CRITERIA

A. Refer to Door and Frame Schedule on the drawings for frame sizes, fire ratings, sound ratings, finishing, door hardware to be installed, and other variations, if any.

B. Door Frame Type: Provide hollow metal door frames with integral casings.

C. Steel used for fabrication of frames shall conform to one or more of the following requirements; galvannealed steel conforming to ASTM A653/A653M, cold-rolled steel conforming to ASTM A1008/A1008M, or hot-rolled pickled and oiled (HRPO) steel conforming to ASTM A1011/A1011M, Commercial Steel (CS) Type B for each.

D. Accessibility: Conform to ICC A117.1 and ADA Standards.

E. Combined Requirements: If a particular door and frame unit is indicated to conform to more than one type of requirement, conform to the specified requirements for each type; for instance, an exterior frame that is also indicated as being sound-rated must conform to the requirements specified for exterior frames and for sound-rated frames; where two requirements conflict, conform to the most stringent.

F. Hardware Preparations, Selections and Locations: Comply with BHMA A156.115, NAAMM HMMA 830, NAAMM HMMA 831 or ANSI/SDI A250.8 (SDI-100) in accordance with specified requirements.

2.03 HOLLOW METAL DOOR FRAMES WITH INTEGRAL CASINGS

A. Interior Door Frames, Non-Fire Rated: Full profile/continuously welded type.
   1. Based on SDI Standards: ANSI/SDI A250.8 (SDI-100).
      a. Level 1 - Standard-duty.
      b. Physical Performance Level C, 250,000 cycles; in accordance with ANSI/SDI A250.4.
      c. Frame Metal Thickness: 18 gage, 0.042 inch, minimum.

2.04 FINISHES

A. Primer: Rust-inhibiting, complying with ANSI/SDI A250.10, door manufacturer's standard.

2.05 ACCESSORIES

A. Silencers: Resilient rubber, fitted into drilled hole; 3 on strike side of single door, 3 on center mullion of pairs, and 2 on head of pairs without center mullions.

PART 3 EXECUTION

3.01 EXAMINATION

A. Verify existing conditions before starting work.

B. Verify that opening sizes and tolerances are acceptable.

C. Verify that finished walls are in plane to ensure proper door alignment.

3.02 PREPARATION

A. Coat inside of frames to be installed in masonry or to be grouted, with bituminous coating, prior to installation.

3.03 INSTALLATION

A. Install frames in accordance with manufacturer's instructions and related requirements of specified frame standards or custom guidelines indicated.

B. Coordinate frame anchor placement with wall construction.

C. Install door hardware as specified in Section 08 71 00.

D. Coordinate installation of electrical connections to electrical hardware items.

3.04 SCHEDULE

A. Refer to Door and Frame Schedule on the drawings.

END OF SECTION

SECTION 08 14 16
FLUSH WOOD DOORS

PART 1 GENERAL

1.01 SECTION INCLUDES

A. Flush wood doors; flush configuration; non-rated.

1.02 RELATED REQUIREMENTS

A. Section 08 12 13 - Hollow Metal Frames.

B. Section 08 71 00 - Door Hardware.

C. Section 09 91 23 - Interior Painting: Field finishing of doors.

1.03 SUBMITTALS

A. See Section 01 30 00 - Administrative Requirements, for submittal procedures.

B. Product Data: Indicate door core materials and construction; veneer species, type and characteristics.

C. Shop Drawings: Show doors and frames, elevations, sizes, types, swings, undercuts, beveling, blocking for hardware, factory machining, factory finishing, cutouts for glazing and other details.

D. Warranty, executed in Owner's name.

1.04 DELIVERY, STORAGE, AND HANDLING

A. Package, deliver and store doors in accordance with specified quality standard.

B. Accept doors on site in manufacturer's packaging. Inspect for damage.

C. Protect doors with resilient packaging sealed with heat shrunk plastic. Do not store in damp or wet areas; or in areas where sunlight might bleach veneer. Seal top and bottom edges with tinted sealer if stored more than one week. Break seal on site to permit ventilation.

1.05 WARRANTY

A. See Section 01 78 00 - Closeout Submittals, for additional warranty requirements.

B. Interior Doors: Provide manufacturer's warranty for the life of the installation.

C. Include coverage for delamination of veneer, warping beyond specified installation tolerances, defective materials, and telegraphing core construction.

PART 2 PRODUCTS

2.01 MANUFACTURERS

A. Wood Veneer Faced Doors:
   1. Graham Wood Doors: www.grahamdoors.com.
   2. Marshfield DoorSystems, Inc: www.marshfielddoors.com.

2.02 DOORS AND PANELS

A. Doors: Refer to drawings for locations and additional requirements.
   1. Wood Veneer Faced Doors: 5-ply unless otherwise indicated.

B. Interior Doors: 1-3/4 inches thick unless otherwise indicated; flush construction.
   1. Provide solid core doors at each location.

2.03 DOOR AND PANEL CORES

A. Non-Rated Solid Core and 20 Minute Rated Doors: Type particleboard core (PC), plies and faces as indicated.

2.04 DOOR FACINGS

A. Veneer Facing for Transparent Finish: Red oak, veneer grade in accordance with quality standard indicated, plain sliced (flat cut), with book match between leaves of veneer, running match of spliced veneer leaves assembled on door or panel face.

2.05 DOOR CONSTRUCTION

A. Fabricate doors in accordance with door quality standard specified.

B. Cores Constructed with stiles and rails:
   1. Provide solid blocks at lock edge for hardware reinforcement.
   2. Provide solid blocking for other throughbolted hardware.

C. Factory machine doors for hardware other than surface-mounted hardware, in accordance with hardware requirements and dimensions.

D. Factory fit doors for frame opening dimensions identified on shop drawings, with edge clearances in accordance with specified quality standard.

E. Provide edge clearances in accordance with the quality standard specified.

2.06 FACTORY FINISHING - WOOD VENEER DOORS

A. Finish work in accordance with AWI/AWMAC/WI (AWS) or AWMAC/WI (NAAWS), Section 5 - Finishing for grade specified and as follows:
   1. Transparent:
      a. System - 1, Lacquer, Nitrocellulose.
      b. Stain: As selected by Architect.
      c. Sheen: Flat.

PART 3 EXECUTION

3.01 EXAMINATION

A. Verify existing conditions before starting work.

B. Verify that opening sizes and tolerances are acceptable.

C. Do not install doors in frame openings that are not plumb or are out-of-tolerance for size or alignment.

3.02 INSTALLATION

A. Install doors in accordance with manufacturer's instructions and specified quality standard.

B. Factory-Finished Doors: Do not field cut or trim; if fit or clearance is not correct, replace door.

C. Use machine tools to cut or drill for hardware.

D. Coordinate installation of doors with installation of frames and hardware.

3.03 ADJUSTING

A. Adjust doors for smooth and balanced door movement.

B. Adjust closers for full closure.

END OF SECTION

SECTION 08 51 13
ALUMINUM WINDOWS

PART 1 GENERAL

1.01 SECTION INCLUDES

A. Extruded aluminum windows with fixed sash, operating sash, and infill panels.

B. Factory glazing.

1.02 RELATED REQUIREMENTS

A. Section 05 50 00 - Metal Fabrications: Steel lintels.

B. Section 06 10 00 - Rough Carpentry: Wood perimeter shims.

C. Section 07 92 00 - Joint Sealants: Sealing joints between window frames and adjacent construction.

D. Section 08 80 00 - Glazing.

1.03 SUBMITTALS

A. See Section 01 30 00 - Administrative Requirements, for submittal procedures.

B. Product Data: Provide component dimensions, information on glass and glazing, internal drainage details, and descriptions of hardware and accessories.

C. Shop Drawings: Indicate opening dimensions, elevations of different types, framed opening tolerances, method for achieving air and vapor barrier seal to adjacent construction, anchorage locations, and installation requirements.

D. Grade Substantiation: Prior to submitting shop drawings or starting fabrication, submit one of the following showing compliance with specified grade:
   1. Evidence of AAMA Certification.
   2. Evidence of WDMA Certification.
   3. Evidence of CSA Certification.
   4. Test report(s) by independent testing agency itemizing compliance and acceptable to authorities having jurisdiction.

E. Warranty: Submit manufacturer warranty and ensure that forms have been completed in Owner's name and registered with manufacturer.

1.04 DELIVERY, STORAGE, AND HANDLING

A. Comply with requirements of AAMA CW-10.

B. Protect finished surfaces with wrapping paper or strippable coating during installation. Do not use adhesive papers or sprayed coatings that bond to substrate when exposed to sunlight or weather.

1.05 FIELD CONDITIONS

A. Do not install sealants when ambient temperature is less than 40 degrees F.

B. Maintain this minimum temperature during and 24 hours after installation of sealants.

1.06 WARRANTY

A. See Section 01 78 00 - Closeout Submittals, for additional warranty requirements.

B. Correct defective Work within a five year period after Date of Substantial Completion.

C. Provide five year manufacturer warranty against failure of glass seal on insulating glass units, including interpane dusting or misting. Include provision for replacement of failed units.

D. Provide five year manufacturer warranty against excessive degradation of exterior finish. Include provision for replacement of units with excessive fading, chalking, or flaking.

PART 2 PRODUCTS

2.01 BASIS OF DESIGN - AW PERFORMANCE CLASS WINDOWS

A. Grade: AAMA/WDMA/CSA 101/I.S.2/A440 having Performance Class of AW, and Performance Grade at least as high as specified design pressure.

2.02 MANUFACTURERS

A. Aluminum Windows:
   1. EFCO, a Pella Company: www.efcocorp.com/#sle.
   2. Manko Window Systems, Inc: www.mankowindows.com.
   3. Peerless Products, Inc: www.peerlessproducts.com.
   4. Substitutions: See Section 01 60 00 - Product Requirements.

2.03 WINDOWS

A. Aluminum Windows: Extruded aluminum frame and sash, factory fabricated, factory finished, with operating hardware, related flashings, and anchorage and attachment devices.
   1. Fabrication: Joints and corners flush, hairline, and weatherproof, accurately fitted and secured; prepared to receive anchors; fasteners and attachments concealed from view; reinforced as required for operating hardware and imposed loads.
   2. Perimeter Clearance: Minimize space between framing members and adjacent construction while allowing expected movement.
   3. Movement: Accommodate movement between window and perimeter framing and deflection of lintel, without damage to components or deterioration of seals.
   4. System Internal Drainage: Drain to the exterior by means of a weep drainage network any water entering joints, condensation occurring in glazing channel, and migrating moisture occurring within system.

B. Performance Requirements: Provide products that comply with the following:

2.04 MATERIALS

A. Extruded Aluminum: ASTM B221 (ASTM B221M), 6063 alloy, T6 temper.

B. Concealed Steel Items: Profiled to suit mullion sections; galvanized in accordance with ASTM A123/A123M.

2.05 FINISHES

A. Finish Color: As selected by Architect from manufacturer's standard range.

PART 3 EXECUTION

3.01 EXAMINATION

A. Verify that wall openings and adjoining air and vapor seal materials are ready to receive aluminum windows.

3.02 INSTALLATION

A. Install windows in accordance with manufacturer's instructions.

B. Attach window frame and shims to perimeter opening to accommodate construction tolerances and other irregularities.

C. Align window plumb and level, free of warp or twist. Maintain dimensional tolerances and alignment with adjacent work.

D. Install sill and sill end angles.

E. Provide thermal isolation where components penetrate or disrupt building insulation. Pack fibrous insulation in shim spaces at perimeter of assembly to maintain continuity of thermal barrier.

F. Install glass and infill panels in accordance with requirements specified in Section 08 80 00.

3.03 CLEANING

A. Remove protective material from factory finished aluminum surfaces.

B. Wash surfaces by method recommended and acceptable to window manufacturer; rinse and wipe surfaces clean.

END OF SECTION

SECTION 08 56 59
SERVICE AND TELLER WINDOW UNITS

PART 1 GENERAL

1.01 SECTION INCLUDES

A. Service and teller window units.

B. Service and teller window units with pass-through device.

1.02 RELATED REQUIREMENTS

A. Section 07 92 00 - Joint Sealants: Sealing joints between frames and adjacent construction.

1.03 REFERENCE STANDARDS

A. AAMA 611 - Voluntary Specification for Anodized Architectural Aluminum; 2014 (2015 Errata).

B. ASTM B221 - Standard Specification for Aluminum and Aluminum-Alloy Extruded Bars, Rods, Wire, Profiles, and Tubes; 2014.

C. ASTM B221M - Standard Specification for Aluminum and Aluminum-Alloy Extruded Bars, Rods, Wire, Profiles, and Tubes (Metric); 2013.

1.04 ADMINISTRATIVE REQUIREMENTS

A. Coordinate work with adjacent materials specified in other sections and as indicated on drawings and approved shop drawings.

1.05 SUBMITTALS

A. See Section 01 30 00 - Administrative Requirements, for submittal procedures.

B. Product Data: Submit manufacturer's product data for specified products indicating materials, operation, glazing, finishes, and installation instructions.

C. Shop Drawings: Indicate configuration, sizes, rough-in, mounting, anchors and fasteners, and installation clearances.

D. Test Data: Test reports for specific window model and glazing to be furnished, showing compliance with all specified requirements; window and glazing may be tested separately, provided window test sample adequately simulates the glazing to be used.

E. Manufacturer Qualification Statement.

F. Installer Qualification Statement.

G. Warranty: Submit manufacturer warranty and ensure that forms have been completed in Owner's name and registered with manufacturer.

1.06 QUALITY ASSURANCE

A. Manufacturer Qualifications: Company specializing in manufacturing products specified in this section with at least ten years documented experience, and with ability to provide test reports showing that their standard manufactured products meet the specified requirements.

1.07 DELIVERY, STORAGE, AND HANDLING

A. Deliver units in manufacturer's original packaging and unopened containers with identification labels intact.

B. Store units in area protected from exposure to weather and vandalism.

1.08 WARRANTY

A. See Section 01 78 00 - Closeout Submittals, for additional warranty requirements.

B. Provide manufacturer's warranty agreeing to repair or replace units and their components that fail in materials or workmanship within five years from Date of Substantial Completion.

PART 2 PRODUCTS

2.01 MANUFACTURERS

A. Service and Teller Window Units:

1. Easi-Serv Products: www.easi-serv.com/#sle.
2. Ready Access, Inc: www.ready-access.com.
3. Quikserv Corp: www.quikserv.com/#sle.
4. Substitutions: See Section 01 60 00 - Product Requirements.

2.02 SERVICE AND TELLER WINDOW UNITS

A. Location: Built within interior wall, as indicated on drawings.

B. Type of Use: As indicated on drawings.

C. Window Type: Fixed.
   1. Mounting: Flush with wall surface.
   2. Window Size: As indicated on drawings.

D. Glazing: Single (monolithic), clear.

2.03 ASSEMBLY COMPONENTS

A. Windows: Factory-fabricated, finished, and glazed, with extruded aluminum frame and glazing stops; complete with hardware and anchors.
   1. Provide window units that are re-glazable from the secure side without dismantling the non-secure side of framing.
   2. Rigidly fit and secure joints and corners with internal reinforcement. Make joints and connections flush, hairline, and weatherproof. Fully weld corners.
   3. Apply factory finish to exposed surfaces.
   4. Wind Design: Design and size components to withstand dead loads and live loads caused by pressure and negative wind loads acting normal to plane of window as calculated in accordance with applicable code.

2.04 MATERIALS

A. Aluminum Extrusions: Minimum 1/8 inch thick frame and sash material complying with ASTM B221 and ASTM B221M.

2.05 FINISHES

A. Class I Natural Anodized Finish: AAMA 611 AA-M12C22A41 Clear anodic coating not less than 0.7 mils thick.

B. Color: To be selected by Architect from manufacturer's standard range.

PART 3 EXECUTION

3.01 EXAMINATION

A. Verify that window openings are ready for installation of windows.

B. Verify that correct embedded anchors are in place and in proper location; repair or replace anchors as required to achieve satisfactory installation.

C. Notify Architect if conditions are not suitable for installation of units; do not proceed until conditions are satisfactory.

3.02 INSTALLATION

A. Install in accordance with manufacturer's instructions.

B. Install units in correct orientation (inside/outside or secure/non-secure).

C. Anchor units securely in manner so as to achieve performance specified.

3.03 CLEANING

A. Remove protective material from factory finished surfaces.

B. Clean exposed surfaces promptly after installation without damaging finishes.

3.04 PROTECTION

A. Provide temporary protection to ensure that service and teller windows are without damage upon Date of Substantial Completion.

END OF SECTION

SECTION 08 80 00
GLAZING

PART 1 GENERAL

1.01 SECTION INCLUDES

A. Insulating glass units.

B. Glazing compounds and accessories.

1.02 SUBMITTALS

A. See Section 01 30 00 - Administrative Requirements, for submittal procedures.

B. Product Data on Insulating Glass Unit, Glazing Unit, Plastic Sheet Glazing Unit, and Plastic Film Glazing Types: Provide structural, physical and environmental characteristics, size limitations, special handling and installation requirements.

C. Product Data on Glazing Compounds and Accessories: Provide chemical, functional, and environmental characteristics, limitations, special application requirements, and identify available colors.

D. Warranty Documentation: Submit manufacturer warranty and ensure that forms have been completed in Owner's name and registered with manufacturer.

1.03 FIELD CONDITIONS

A. Do not install glazing when ambient temperature is less than 40 degrees F.

B. Maintain minimum ambient temperature before, during and 24 hours after installation of glazing compounds.

1.04 WARRANTY

A. See Section 01 78 00 - Closeout Submittals, for additional warranty requirements.

B. Insulating Glass Units: Provide a five (5) year manufacturer warranty to include coverage for seal failure, interpane dusting or misting, including providing products to replace failed units.

PART 2 PRODUCTS

2.01 ACCESSORIES

A. Setting Blocks: Silicone, with 80 to 90 Shore A durometer hardness; ASTM C864 Option II. Length of 0.1 inch for each square foot of glazing or minimum 4 inch by width of glazing rabbet space minus 1/16 inch by height to suit glazing method and pane weight and area.

B. Spacer Shims: Neoprene, 50 to 60 Shore A durometer hardness; ASTM C864 Option II. Minimum 3 inch long by one half the height of the glazing stop by thickness to suit application, self adhesive on one face.

C. Glazing Tape, Back Bedding Mastic Type: Preformed, butyl-based, 100 percent solids compound with integral resilient spacer rod applicable to application indicated; 5 to 30 cured Shore A durometer hardness; coiled on release paper; black color.
   1. Width: As required for application.
   2. Thickness: As required for application.

PART 3 EXECUTION

3.01 VERIFICATION OF CONDITIONS

A. Verify that openings for glazing are correctly sized and within tolerances, including those for size, squareness, and offsets at corners.

B. Verify that surfaces of glazing channels or recesses are clean, free of obstructions that may impede moisture movement, weeps are clear, and support framing is ready to receive glazing system.

3.02 PREPARATION

A. Clean contact surfaces with appropriate solvent and wipe dry within maximum of 24 hours before glazing. Remove coatings that are not tightly bonded to substrates.

B. Seal porous glazing channels or recesses with substrate compatible primer or sealer.

C. Prime surfaces scheduled to receive sealant where required for proper sealant adhesion.

3.03 INSTALLATION, GENERAL

A. Install glazing in compliance with written instructions of glass, gaskets, and other glazing material manufacturers, unless more stringent requirements are indicated, including those in glazing referenced standards.

B. Install glazing sealants in accordance with ASTM C1193, GANA (SM), and manufacturer's instructions.

3.04 CLEANING

A. Remove excess glazing materials from finish surfaces immediately after application using solvents or cleaners recommended by manufacturers.

B. Remove non-permanent labels immediately after glazing installation is complete.

C. Clean glass and adjacent surfaces after sealants are fully cured.

D. Clean glass on both exposed surfaces not more than 4 days prior to Date of Substantial Completion in accordance with glass manufacturer's written recommendations.

3.05 PROTECTION

A. After installation, mark pane with an 'X' by using removable plastic tape or paste; do not mark heat absorbing or reflective glass units.

B. Remove and replace glass that is damaged during construction period prior to Date of Substantial Completion.

END OF SECTION

SECTION 08 83 00
MIRRORS

PART 1 GENERAL

1.01 SECTION INCLUDES

A. Glass mirrors.
   1. Annealed float glass.
   2. Tempered safety glass.

1.02 RELATED REQUIREMENTS

A. Section 10 28 00 - Toilet, Bath, and Laundry Accessories: Metal mirror frames.

1.03 REFERENCE STANDARDS

A. ASTM C920 - Standard Specification for Elastomeric Joint Sealants; 2018.

B. ASTM C1036 - Standard Specification for Flat Glass; 2016.

C. ASTM C1048 - Standard Specification for Heat-Strengthened and Fully Tempered Flat Glass; 2012.

D. ASTM C1193 - Standard Guide for Use of Joint Sealants; 2016.

E. GANA (TIPS) - Mirrors: Handle with Extreme Care (Tips for the Professional on the Care and Handling of Mirrors); 2011.

1.04 SUBMITTALS

A. See Section 01 30 00 - Administrative Requirements, for submittal procedures.

B. Product Data on Mirror Types: Submit structural, physical and environmental characteristics, size limitations, special handling and installation requirements.

C. Warranty: Submit manufacturer warranty and ensure that forms have been completed in Owner's name and registered with manufacturer.

1.05 FIELD CONDITIONS

A. Do not install mirrors when ambient temperature is less than 50 degrees F.

B. Maintain minimum ambient temperature before, during and 24 hours after installation of glazing compounds.

1.06 WARRANTY

A. See Section 01 78 00 - Closeout Submittals, for additional warranty requirements.

B. Provide Ten year manufacturer warranty for reflective coating on mirrors and replacement of same.

PART 2 PRODUCTS

2.01 MANUFACTURERS

A. Mirrors:
   1. Binswanger Mirror/ACI Distribution: www.binswangerglass.com.
   2. Lenoir Mirror Co: www.lenoirmirror.com.
   3. Trulite Glass and Aluminum Solutions: www.trulite.com.

2.02 MATERIALS

A. Mirror Design Criteria: Select materials and/or provide supports as required to limit mirror material deflection to 1/200, or to the flexure limit of glass, with full recovery of glazing materials, whichever is less.

B. Mirror Glass: Clear, annealed float glass; ASTM C1036, with copper and silver coatings, and protective overcoating.
   1. Thickness: 1/4 inch.
   2. Size: As scheduled.

2.03 GLAZING COMPOUNDS

A. Silicone Sealant: ASTM C920, Type S, Grade NS, Class 25, Uses M and A; single component; chemical or solvent curing; non-bleeding, non-staining, cured Shore A hardness of 15 to 25; color as selected.

2.04 ACCESSORIES

A. Setting Blocks: Neoprene, 80 to 90 Shore A durometer hardness.

B. Mirror Adhesive: Silicone pre-polymer based, chemically compatible with mirror coating and wall substrate.
   1. Application Temperature: Minus 35 to 140 degrees F at contact surfaces.

PART 3 EXECUTION

3.01 EXAMINATION

A. Verify that surfaces of mirror frames or recesses are clean, free of obstructions, and ready for installation of mirrors.

3.02 PREPARATION

A. Prepare installation in accordance with ASTM C1193 for solvent release sealants, and install sealant in accordance with manufacturer's instructions.

3.03 INSTALLATION

A. Install mirrors in accordance with GANA (TIPS) and manufacturers recommendations.

B. Set mirrors plumb and level, and free of optical distortion.

C. Set mirrors with edge clearance free of surrounding construction including countertops or backsplashes.

3.04 CLEANING

A. Remove wet glazing materials from finish surfaces.

B. Remove labels after work is complete.

C. Clean mirrors and adjacent surfaces.

END OF SECTION

SECTION 087100 – DOOR HARDWARE

PART 1 - GENERAL

1.1 RELATED DOCUMENTS

A. Drawings and general provisions of the Contract, including General and Supplementary Conditions and Division 1 Specification Sections, apply to this Section.

1.2 SUMMARY

A. This Section includes commercial door hardware for the following:

1. Swinging doors.
2. Sliding doors.
3. Other doors to the extent indicated.

B. Door hardware includes, but is not necessarily limited to, the following:

1. Mechanical door hardware.
2. Cylinders specified for doors in other sections.

C. Related Sections:

1. Division 08 Section “Door Hardware Schedule”.
2. Division 08 Section “Hollow Metal Doors and Frames”.
3. Division 08 Section “Stainless Steel Doors and Frames”.
4. Division 08 Section “Flush Wood Doors”.
5. Division 08 Section “Bullet Resistant Doors and Frame”.
6. Division 08 Section “Cold Storage Doors”.
7. Division 08 Section “Radio-Frequency Interference Shielding Doors”.
8. Division 08 Section “Radiation Shielding Doors and Frames”.
9. Division 08 Section “Attack Resistant Doors and Frames.”
10. Division 08 Section “Forced Entry Doors and Frames”.
11. Division 08 Section “Sound Control Hollow Metal Door Assemblies”.
12. Division 08 Section “Sound Control Wood Door Assemblies”.
13. Division 08 Section “Sanitary and Watertight Doors and Frames”.
14. Division 08 Section “Blast Resistant Doors”.
15. Division 28 Section “Multi-Family Access Control”.

D. Codes and References: Comply with the version year adopted by the Authority Having Jurisdiction.

1. ANSI A117.1 - Accessible and Usable Buildings and Facilities.
2. ICC/IBC - International Building Code.

3. NFPA 70 - National Electrical Code.
4. NFPA 80 - Fire Doors and Windows.
5. NFPA 101 - Life Safety Code.
6. NFPA 105 - Installation of Smoke Door Assemblies.
7. State Building Codes, Local Amendments.

E. Standards: All hardware specified herein shall comply with the following industry standards:

1. ANSI/BHMA Certified Product Standards - A156 Series
2. UL10C – Positive Pressure Fire Tests of Door Assemblies

1.3 SUBMITTALS

A. Product Data: Manufacturer's product data sheets including installation details, material descriptions, dimensions of individual components and profiles, operational descriptions and finishes.

B. Door Hardware Schedule: Prepared by or under the supervision of supplier, detailing fabrication and assembly of door hardware, as well as procedures and diagrams. Coordinate the final Door Hardware Schedule with doors, frames, and related work to ensure proper size, thickness, hand, function, and finish of door hardware.

1. Format: Comply with scheduling sequence and vertical format in DHI's "Sequence and Format for the Hardware Schedule."

2. Organization: Organize the Door Hardware Schedule into door hardware sets indicating complete designations of every item required for each door or opening. Organize door hardware sets in same order as in the Door Hardware Sets at the end of Part 3. Submittals that do not follow the same format and order as the Door Hardware Sets will be rejected and subject to resubmission.

3. Content: Include the following information:

a. Type, style, function, size, label, hand, and finish of each door hardware item.
b. Manufacturer of each item.
c. Fastenings and other pertinent information.
d. Location of door hardware set, cross-referenced to Drawings, both on floor plans and in door and frame schedule.
e. Explanation of abbreviations, symbols, and codes contained in schedule.
f. Mounting locations for door hardware.
g. Door and frame sizes and materials.
h. Warranty information for each product.

4. Submittal Sequence: Submit the final Door Hardware Schedule at earliest possible date, particularly where approval of the Door Hardware Schedule must precede fabrication of other work that is critical in the Project construction

schedule. Include Product Data, Samples, Shop Drawings of other work affected by door hardware, and other information essential to the coordinated review of the Door Hardware Schedule.

C. Keying Schedule: After a keying meeting with the owner has taken place prepare a separate keying schedule detailing final instructions. Submit the keying schedule in electronic format. Include keying system explanation, door numbers, key set symbols, hardware set numbers and special instructions. Owner must approve submitted keying schedule prior to the ordering of permanent cylinders/cores.

D. Informational Submittals:

1. Product Test Reports: Indicating compliance with cycle testing requirements, based on evaluation of comprehensive tests performed by manufacturer and witnessed by a qualified independent testing agency.

E. Operating and Maintenance Manuals: Provide manufacturers operating and maintenance manuals for each item comprising the complete door hardware installation in quantity as required in Division 01, Closeout Submittals.

1.4 QUALITY ASSURANCE

A. Manufacturers Qualifications: Engage qualified manufacturers with a minimum 5 years of documented experience in producing hardware and equipment similar to that indicated for this Project and that have a proven record of successful in-service performance.

B. Installer Qualifications: A minimum 3 years documented experience installing both standard and electrified door hardware similar in material, design, and extent to that indicated for this Project and whose work has resulted in construction with a record of successful in-service performance.

C. Door Hardware Supplier Qualifications: Experienced commercial door hardware distributors with a minimum 5 years documented experience supplying both mechanical and electromechanical hardware installations comparable in material, design, and extent to that indicated for this Project. Supplier recognized as a factory direct distributor by the manufacturers of the primary materials with a warehousing facility in Project's vicinity. Supplier to have on staff a certified Architectural Hardware Consultant (AHC) available during the course of the Work to consult with Contractor, Architect, and Owner concerning both standard and electromechanical door hardware and keying.

D. Source Limitations: Obtain each type and variety of door hardware specified in this section from a single source unless otherwise indicated.

1. Electrified modifications or enhancements made to a source manufacturer's product line by a secondary or third party source will not be accepted.

E. Each unit to bear third party permanent label demonstrating compliance with the referenced standards.

F. Keying Conference: Conduct conference to comply with requirements in Division 01 Section "Project Meetings." Keying conference to incorporate the following criteria into the final keying schedule document:

1. Function of building, purpose of each area and degree of security required.
2. Plans for existing and future key system expansion.
3. Requirements for key control storage and software.
4. Installation of permanent keys, cylinder cores and software.
5. Address and requirements for delivery of keys.

G. Pre-Submittal Conference: Conduct coordination conference in compliance with requirements in Division 01 Section "Project Meetings" with attendance by representatives of Supplier(s), Installer(s), and Contractor(s) to review proper methods and the procedures for receiving, handling, and installing door hardware.

1. Prior to installation of door hardware, conduct a project specific training meeting to instruct the installing contractors' personnel on the proper installation and adjustment of their respective products. Product training to be attended by installers of door hardware (including electromechanical hardware) for aluminum, hollow metal and wood doors. Training will include the use of installation manuals, hardware schedules, templates and physical product samples as required.
2. Inspect and discuss electrical roughing-in, power supply connections, and other preparatory work performed by other trades.
3. Review sequence of operation narratives for each unique access controlled opening.
4. Review and finalize construction schedule and verify availability of materials.
5. Review the required inspecting, testing, commissioning, and demonstration procedures

H. At completion of installation, provide written documentation that components were applied to manufacturer's instructions and recommendations and according to approved schedule.

1.5 DELIVERY, STORAGE, AND HANDLING

A. Inventory door hardware on receipt and provide secure lock-up and shelving for door hardware delivered to Project site. Do not store electronic access control hardware, software or accessories at Project site without prior authorization.

B. Tag each item or package separately with identification related to the final Door Hardware Schedule, and include basic installation instructions with each item or package.

C. Deliver, as applicable, permanent keys, cylinders, cores, access control credentials, software and related accessories directly to Owner via registered mail or overnight

package service. Instructions for delivery to the Owner shall be established at the "Keying Conference".

1.6 COORDINATION

A. Templates: Obtain and distribute to the parties involved templates for doors, frames, and other work specified to be factory prepared for installing standard and electrified hardware. Check Shop Drawings of other work to confirm that adequate provisions are made for locating and installing hardware to comply with indicated requirements.

B. Door and Frame Preparation: Doors and corresponding frames are to be prepared, reinforced and pre-wired (if applicable) to receive the installation of the specified electrified, monitoring, signaling and access control system hardware without additional in-field modifications.

1.7 WARRANTY

A. General Warranty: Reference Division 01, General Requirements. Special warranties specified in this Article shall not deprive Owner of other rights Owner may have under other provisions of the Contract Documents and shall be in addition to, and run concurrent with, other warranties made by Contractor under requirements of the Contract Documents.

B. Warranty Period: Written warranty, executed by manufacturer(s), agreeing to repair or replace components of standard and electrified door hardware that fails in materials or workmanship within specified warranty period after final acceptance by the Owner. Failures include, but are not limited to, the following:

1. Structural failures including excessive deflection, cracking, or breakage.
2. Faulty operation of the hardware.
3. Deterioration of metals, metal finishes, and other materials beyond normal weathering.
4. Electrical component defects and failures within the systems operation.

C. Standard Warranty Period: One year from date of Substantial Completion, unless otherwise indicated.

D. Special Warranty Periods:
1. Twenty five years for manual surface door closer bodies.

1.8 MAINTENANCE SERVICE

A. Maintenance Tools and Instructions: Furnish a complete set of specialized tools and maintenance instructions as needed for Owner's continued adjustment, maintenance, and removal and replacement of door hardware.

PART 2 - PRODUCTS

2.1 SCHEDULED DOOR HARDWARE

A. General: Provide door hardware for each door to comply with requirements in Door Hardware Sets and each referenced section that products are to be supplied under.

B. Designations: Requirements for quantity, item, size, finish or color, grade, function, and other distinctive qualities of each type of door hardware are indicated in the Door Hardware Sets at the end of Part 3. Products are identified by using door hardware designations, as follows:

1. Named Manufacturer's Products: Product designation and manufacturer are listed for each door hardware type required for the purpose of establishing requirements. Manufacturers' names are abbreviated in the Door Hardware Schedule.

C. Substitutions: Requests for substitution and product approval for inclusive mechanical and electromechanical door hardware in compliance with the specifications must be submitted in writing and in accordance with the procedures and time frames outlined in Division 01, Substitution Procedures. Approval of requests is at the discretion of the architect, owner, and their designated consultants.

2.2 HANGING DEVICES

A. Hinges: ANSI/BHMA A156.1 certified butt hinges with number of hinge knuckles and other options as specified in the Door Hardware Sets.

1. Quantity: Provide the following hinge quantity, unless otherwise indicated:

    a. Two Hinges: For doors with heights up to 60 inches.
    b. Three Hinges: For doors with heights 61 to 90 inches.
    c. Four Hinges: For doors with heights 91 to 120 inches.
    d. For doors with heights more than 120 inches, provide 4 hinges, plus 1 hinge for every 30 inches of door height greater than 120 inches.

2. Hinge Size: Provide the following, unless otherwise indicated, with hinge widths sized for door thickness and clearances required:

    a. Widths up to 3’0”: 4-1/2” standard or heavy weight as specified.
    b. Sizes from 3’1” to 4’0”: 5” standard or heavy weight as specified.

3. Hinge Weight and Base Material: Unless otherwise indicated, provide the following:

    a. Exterior Doors: Heavy weight, non-ferrous, ball bearing or oil impregnated bearing hinges unless Hardware Sets indicate standard weight.

b. Interior Doors: Standard weight, steel, ball bearing or oil impregnated bearing hinges unless Hardware Sets indicate heavy weight.

4. Hinge Options: Comply with the following:

a. Non-removable Pins: Provide set screw in hinge barrel that, when tightened into a groove in hinge pin, prevents removal of pin while door is closed; for the all out-swinging lockable doors.

5. Manufacturers:

a. Hager Companies (HA).
b. McKinney Products; ASSA ABLOY Architectural Door Accessories (MK).
c. Stanley Hardware (ST).

B. Concealed Hinges: Hinges mortised into door and frame so that they are concealed when the door is closed. Hinges shall be adjustable three ways; vertically, horizontally and compression (in/out) capable of supporting doors up to 282 pounds with four hinges with a 180 degree swing.

1. Manufacturers:

a. McKinney Products; ASSA ABLOY Architectural Door Accessories (MK).
b. Soss Door Hardware.
c. Tectus by Simonswerk.

2.3 POWER TRANSFER DEVICES

A. Electric Door Wire Harnesses: Provide electric/data transfer wiring harnesses with standardized plug connectors to accommodate up to twelve (12) wires. Connectors plug directly to through-door wiring harnesses for connection to electric locking devices and power supplies. Provide sufficient number and type of concealed wires to accommodate electric function of specified hardware. Provide a connector for through-door electronic locking devices and from hinge to junction box above the opening. Wire nut connections are not acceptable. Determine the length required for each electrified hardware component for the door type, size and construction, minimum of two per electrified opening.

1. Manufacturers:

a. Hager Companies (HA) - Quick Connect.
b. McKinney Products; ASSA ABLOY Architectural Door Accessories (MK) – QC-C Series.
c. Stanley Hardware (ST) – WH Series.

2.4 CYLINDERS AND KEYING

A. General: Cylinder manufacturer to have minimum (10) years experience designing secured master key systems and have on record a published security keying system policy.

B. Source Limitations: Obtain each type of keyed cylinder and keys from the same source manufacturer as locksets and exit devices, unless otherwise indicated.

C. Cylinders: Original manufacturer cylinders complying with the following:

1. Mortise Type: Threaded cylinders with rings and cams to suit hardware application.
2. Rim Type: Cylinders with back plate, flat-type vertical or horizontal tailpiece, and raised trim ring.
3. Bored-Lock Type: Cylinders with tailpieces to suit locks.
4. Mortise and rim cylinder collars to be solid and recessed to allow the cylinder face to be flush and be free spinning with matching finishes.
5. Keyway: Match Facility Standard.

D. Keying System: Each type of lock and cylinders to be factory keyed.

1. Conduct specified "Keying Conference" to define and document keying system instructions and requirements.
2. Furnish factory cut, nickel-silver large bow permanently inscribed with a visual key control number as directed by Owner.
3. Existing System: Key locks to Owner's existing system.

E. Key Quantity: Provide the following minimum number of keys:

1. Change Keys per Cylinder: Two (2)
2. Master Keys (per Master Key Level/Group): Five (5).

2.5 MECHANICAL LOCKS AND LATCHING DEVICES

A. Cylindrical Locksets, Grade 1 (Commercial Duty): ANSI/BHMA A156.2, Series 4000, Grade 1 certified.

1. Locks are to be non-handed and fully field reversible.

2. Manufacturers:

a. Corbin Russwin Hardware (RU) – CL3500 Series.
b. Dorma Products (DO) - CL800 Series.
c. Yale Locks and Hardware (YA) 4700LN Series.

2.6 LOCK AND LATCH STRIKES

A. Strikes: Provide manufacturer's standard strike with strike box for each latch or lock bolt, with curved lip extended to protect frame, finished to match door hardware set, unless otherwise indicated, and as follows:

1. Flat-Lip Strikes: For locks with three-piece antifriction latchbolts, as recommended by manufacturer.
2. Extra-Long-Lip Strikes: For locks used on frames with applied wood casing trim.
3. Aluminum-Frame Strike Box: Provide manufacturer's special strike box fabricated for aluminum framing.
4. Double-lipped strikes: For locks at double acting doors. Furnish with retractable stop for rescue hardware applications.

B. Standards: Comply with the following:

1. Strikes for Mortise Locks and Latches: BHMA A156.13.
2. Strikes for Bored Locks and Latches: BHMA A156.2.
3. Strikes for Auxiliary Deadlocks: BHMA A156.36.
4. Dustproof Strikes: BHMA A156.16.

2.7 ELECTRIC STRIKES

A. Standard Electric Strikes: Heavy duty, cylindrical and mortise lock electric strikes conforming to ANSI/BHMA A156.31, Grade 1, UL listed for both Burglary Resistance and for use on fire rated door assemblies. Stainless steel construction with dual interlocking plunger design tested to exceed 1500 lbs. of static strength and 70 ft-lbs. of dynamic strength. Strikes tested for a minimum 1 million operating cycles. Provide strikes with 12 or 24 VDC capability and supplied standard as fail-secure unless otherwise specified. Provide latchbolt and latchbolt strike monitoring indicating both the position of the latchbolt and locked condition of the strike where specified.

1. Manufacturers:

   a. Folger Adam EDC (FO).
   b. HES (HS). Model 1500.
   c. Security Door Controls (SD).

B. Provide electric strikes with in-line power controller and surge suppressor by the same manufacturer as the strike with the combined products having a five year warranty.

2.8 DOOR CLOSERS

A. All door closers specified herein shall meet or exceed the following criteria:

1. General: Door closers to be from one manufacturer, matching in design and style, with the same type door preparations and templates regardless of

application or spring size. Closers to be non-handed with full sized covers including installation and adjusting information on inside of cover.

2. Standards: Closers to comply with UL-10C for Positive Pressure Fire Test and be U.L. listed for use of fire rated doors.

3. Cycle Testing: Provide closers which have surpassed 15 million cycles in a test witnessed and verified by UL.

4. Size of Units: Comply with manufacturer's written recommendations for sizing of door closers depending on size of door, exposure to weather, and anticipated frequency of use. Where closers are indicated for doors required to be accessible to the physically handicapped, provide units complying with ANSI ICC/A117.1.

5. Closer Arms: Provide heavy duty, forged steel closer arms unless otherwise indicated in Hardware Sets.

6. Closers shall not be installed on exterior or corridor side of doors; where possible install closers on door for optimum aesthetics.

7. Closer Accessories: Provide door closer accessories including custom templates, special mounting brackets, spacers and drop plates as required for proper installation. Provide through-bolt and security type fasteners as specified in the hardware sets.

B. Door Closers, Surface Mounted (Heavy Duty): ANSI/BHMA A156.4, Grade 1 surface mounted, heavy duty door closers with complete spring power adjustment, sizes 1 thru 6; and fully operational adjustable according to door size, frequency of use, and opening force. Closers to be rack and pinion type, one piece cast iron or aluminum alloy body construction, with adjustable backcheck and separate non-critical valves for closing sweep and latch speed control. Provide non-handed units standard.

1. Manufacturers:

a. Corbin Russwin Hardware (RU) – DC6000 Series.
b. Norton Door Controls (NO) - 7500 Series.
c. Yale Locks and Hardware (YA) - 4400 Series.

2.9 ARCHITECTURAL TRIM

A. Door Protective Trim

1. General: Door protective trim units to be of type and design as specified below or in the Hardware Sets.

2. Size: Fabricate protection plates (kick, armor, or mop) not more than 2" less than door width (LDW) on stop side of single doors and 1” LDW on stop side of pairs of doors, and not more than 1" less than door width on pull side. Coordinate and

provide proper width and height as required where conflicting hardware dictates. Height to be as specified in the Hardware Sets.

3. Where plates are applied to fire rated doors with the top of the plate more than 16" above the bottom of the door, provide plates complying with NFPA 80. Consult manufacturer's catalog and template book for specific requirements for size and applications.

4. Protection Plates: ANSI/BHMA A156.6 certified protection plates (kick, armor, or mop), fabricated from the following:

    a. Stainless Steel: 300 grade, 050-inch thick.

5. Options and fasteners: Provide manufacturer's designated fastener type as specified in the Hardware Sets. Provide countersunk screw holes.

6. Manufacturers:

    a. Hiawatha, Inc. (HI).
    b. Rockwood Products; ASSA ABLOY Architectural Door Accessories (RO).
    c. Trimco (TC).

2.10 DOOR STOPS AND HOLDERS

A. General: Door stops and holders to be of type and design as specified below or in the Hardware Sets.

B. Door Stops and Bumpers: ANSI/BHMA A156.16, Grade 1 certified door stops and wall bumpers. Provide wall bumpers, either convex or concave types with anchorage as indicated, unless floor or other types of door stops are specified in Hardware Sets. Do not mount floor stops where they will impede traffic. Where floor or wall bumpers are not appropriate, provide overhead type stops and holders.

1. Manufacturers:

    a. Hiawatha, Inc. (HI).
    b. Rockwood Products; ASSA ABLOY Architectural Door Accessories (RO).
    c. Trimco (TC).

2.11 ARCHITECTURAL SEALS

A. General: Thresholds, weatherstripping, and gasket seals to be of type and design as specified below or in the Hardware Sets. Provide continuous weatherstrip gasketing on exterior doors and provide smoke, light, or sound gasketing on interior doors where indicated. At exterior applications provide non-corrosive fasteners and elsewhere where indicated.

B. Smoke Labeled Gasketing: Assemblies complying with NFPA 105 that are listed and labeled by a testing and inspecting agency acceptable to authorities having jurisdiction, for smoke control ratings indicated, based on testing according to UL 1784.

1. Provide smoke labeled perimeter gasketing at all smoke labeled openings.

C. Fire Labeled Gasketing: Assemblies complying with NFPA 80 that are listed and labeled by a testing and inspecting agency acceptable to authorities having jurisdiction, for fire ratings indicated, based on testing according to UL-10C.

1. Provide intumescent seals as indicated to meet UL10C Standard for Positive Pressure Fire Tests of Door Assemblies, and NPFA 252, Standard Methods of Fire Tests of Door Assemblies.

D. Sound-Rated Gasketing: Assemblies that are listed and labeled by a testing and inspecting agency, for sound ratings indicated.

E. Replaceable Seal Strips: Provide only those units where resilient or flexible seal strips are easily replaceable and readily available from stocks maintained by manufacturer.

F. Manufacturers:

1. National Guard Products (NG).
2. Pemko Products; ASSA ABLOY Architectural Door Accessories (PE).
3. Reese Enterprises, Inc. (RE).

2.12 FABRICATION

A. Fasteners: Provide door hardware manufactured to comply with published templates generally prepared for machine, wood, and sheet metal screws. Provide screws according to manufacturers recognized installation standards for application intended.

2.13 FINISHES

A. Standard: Designations used in the Hardware Sets and elsewhere indicate hardware finishes complying with ANSI/BHMA A156.18, including coordination with traditional U.S. finishes indicated by certain manufacturers for their products.

B. Provide quality of finish, including thickness of plating or coating (if any), composition, hardness, and other qualities complying with manufacturer's standards, but in no case less than specified by referenced standards for the applicable units of hardware

C. Protect mechanical finishes on exposed surfaces from damage by applying a strippable, temporary protective covering before shipping.

PART 3 - EXECUTION

3.1 EXAMINATION

A. Examine scheduled openings, with Installer present, for compliance with requirements for installation tolerances, labeled fire door assembly construction, wall and floor construction, and other conditions affecting performance.

B. Notify architect of any discrepancies or conflicts between the door schedule, door types, drawings and scheduled hardware. Proceed only after such discrepancies or conflicts have been resolved in writing.

3.2 PREPARATION

A. Hollow Metal Doors and Frames: Comply with ANSI/DHI A115 series.

B. Wood Doors: Comply with ANSI/DHI A115-W series.

3.3 INSTALLATION

A. Install each item of mechanical and electromechanical hardware and access control equipment to comply with manufacturer's written instructions and according to specifications.

1. Installers are to be trained and certified by the manufacturer on the proper installation and adjustment of fire, life safety, and security products including: hanging devices; locking devices; closing devices; and seals.

B. Mounting Heights: Mount door hardware units at heights indicated in following applicable publications, unless specifically indicated or required to comply with governing regulations:

1. Standard Steel Doors and Frames: DHI's "Recommended Locations for Architectural Hardware for Standard Steel Doors and Frames."
2. Wood Doors: DHI WDHS.3, "Recommended Locations for Architectural Hardware for Wood Flush Doors."
3. Where indicated to comply with accessibility requirements, comply with ANSI A117.1 "Accessibility Guidelines for Buildings and Facilities."
4. Provide blocking in drywall partitions where wall stops or other wall mounted hardware is located.

C. Retrofitting: Install door hardware to comply with manufacturer's published templates and written instructions. Where cutting and fitting are required to install door hardware onto or into surfaces that are later to be painted or finished in another way, coordinate removal, storage, and reinstallation of surface protective trim units with finishing work specified in Division 9 Sections. Do not install surface-mounted items until finishes have been completed on substrates involved.

D. Thresholds: Set thresholds for exterior and acoustical doors in full bed of sealant complying with requirements specified in Division 7 Section "Joint Sealants."

E. Storage: Provide a secure lock up for hardware delivered to the project but not yet installed. Control the handling and installation of hardware items so that the completion of the work will not be delayed by hardware losses before and after installation.

3.4 FIELD QUALITY CONTROL

A. Field Inspection: Supplier will perform a final inspection of installed door hardware and state in report whether work complies with or deviates from requirements, including whether door hardware is properly installed, operating and adjusted.

3.5 ADJUSTING

A. Initial Adjustment: Adjust and check each operating item of door hardware and each door to ensure proper operation or function of every unit. Replace units that cannot be adjusted to operate as intended. Adjust door control devices to compensate for final operation of heating and ventilating equipment and to comply with referenced accessibility requirements.

3.6 CLEANING AND PROTECTION

A. Protect all hardware stored on construction site in a covered and dry place. Protect exposed hardware installed on doors during the construction phase. Install any and all hardware at the latest possible time frame.

B. Clean adjacent surfaces soiled by door hardware installation.

C. Clean operating items as necessary to restore proper finish. Provide final protection and maintain conditions that ensure door hardware is without damage or deterioration at time of owner occupancy.

3.7 DEMONSTRATION

A. Instruct Owner's maintenance personnel to adjust, operate, and maintain mechanical and electromechanical door hardware.

3.8 DOOR HARDWARE SETS

A. The hardware sets represent the design intent and direction of the owner and architect. They are a guideline only and should not be considered a detailed hardware schedule. Discrepancies, conflicting hardware and missing items should be brought to the attention of the architect with corrections made prior to the bidding process. Omitted

items not included in a hardware set should be scheduled with the appropriate additional hardware required for proper application and functionality.

B. Manufacturer's Abbreviations:

1. MK - McKinney
2. YA - Yale
3. HS - HES
4. NO - Norton
5. RO - Rockwood

Hardware Sets

Set: 1.0

Doors: 103

3	Hinge	TA2714 4-1/2" x 4-1/2"	US26D	MK
1	Cylindrical Lock	AU 4705LN	626	YA
1	Electric Strike	1500C	630	HS ⚡
1	Surface Closer	7500	689	NO
1	Kick Plate	K1050 10" x 2" LDW	US32D	RO
1	Wall Stop	406	US32D	RO
3	Silencer	608		RO
1	ElectroLynx Harness	QC-C1500P		MK ⚡

Notes: Card reader, power supply, wires and electrical hookup by Security Contractor.

System's Operation:
• Doors normally closed and locked.
• Entry by presenting proper credentials to card reader to unlock electric strike for 5-7 seconds and then relock.
• Key bypass in case of emergency
• Free egress at all times.

Set: 2.0

Doors: 101

3	Hinge	TA2714 4-1/2" x 4-1/2"	US26D	MK

1	Cylindrical Lock	AU 4705LN	626	YA
1	Electric Strike	1500C	630	HS ⚡
1	Surface Closer	CPS7500	689	NO
1	Kick Plate	K1050 10" x 2" LDW	US32D	RO
1	Wall Stop	406	US32D	RO
3	Silencer	608		RO
1	ElectroLynx Harness	QC-C1500P		MK ⚡

Notes: Card reader, power supply, wires and electrical hookup by Security Contractor.

System's Operation:
• Doors normally closed and locked.
• Entry by presenting proper credentials to card reader to unlock electric strike for 5-7 seconds and then relock.
• Key bypass in case of emergency
• Free egress at all times.

Set: 3.0

Doors: 102, 104

3	Hinge	TA2714 4-1/2" x 4-1/2"	US26D	MK
1	Cylindrical Lock	AU 4702LN	626	YA
1	Surface Closer	7500	689	NO
1	Kick Plate	K1050 10" x 2" LDW	US32D	RO
1	Mop Plate	K1050 4" x 1" LDW	US32D	RO
1	Wall Stop	409	US32D	RO
3	Silencer	608		RO

END OF SECTION 087100

SECTION 09 21 16
GYPSUM BOARD ASSEMBLIES

PART 1 GENERAL

1.01 SECTION INCLUDES

A. Metal stud wall framing.

B. Metal channel ceiling framing.

C. Acoustic insulation.

D. Gypsum wallboard.

E. Textured finish system.

1.02 RELATED REQUIREMENTS

A. Section 06 10 00 - Rough Carpentry: Wood blocking product and execution requirements.

B. Section 07 21 00 - Thermal Insulation: Acoustic insulation.

C. Section 07 92 00 - Joint Sealants: Sealing acoustical gaps in construction other than gypsum board or plaster work.

1.03 SUBMITTALS

A. See Section 01 30 00 - Administrative Requirements, for submittal procedures.

B. Product Data: Provide manufacturer's data on partition head to structure connectors, showing compliance with requirements.

PART 2 PRODUCTS

2.01 GYPSUM BOARD ASSEMBLIES

A. Provide completed assemblies complying with ASTM C840 and GA-216.

2.02 METAL FRAMING MATERIALS

A. Manufacturers - Metal Framing, Connectors, and Accessories:
   1. Clarkwestern Dietrich Building Systems LLC: www.clarkdietrich.com.
   2. Jaimes Industries: www.jaimesind.com/#sle.
   3. Substitutions: See Section 01 60 00 - Product Requirements.

B. Non-Loadbearing Framing System Components: ASTM C645; galvanized sheet steel, of size and properties necessary to comply with ASTM C754 for the spacing indicated, with maximum deflection of wall framing of L/120 at 5 psf.
   1. Studs: "C" shaped with flat or formed webs with knurled faces.
   2. Runners: U shaped, sized to match studs.
   3. Ceiling Channels: C-shaped.
   4. Furring: Hat-shaped sections, minimum depth of 7/8 inch.

C. Ceiling Hangers: Type and size as specified in ASTM C754 for spacing required.

D. Partition Head To Structure Connections: Provide track fastened to structure with legs of sufficient length to accommodate deflection, for friction fit of studs cut short and fastened as indicated on drawings.

2.03 BOARD MATERIALS

A. Gypsum Wallboard: Paper-faced gypsum panels as defined in ASTM C1396/C1396M; sizes to minimize joints in place; ends square cut.
   1. Application: Use for vertical surfaces and ceilings, unless otherwise indicated.
   2. Mold Resistance: Score of 10, when tested in accordance with ASTM D3273.
      a. Mold resistant board is required at all wet areas.
   3. Thickness:
      a. Vertical Surfaces: 1/2 inch.
   4. Mold Resistant Paper Faced Products:
      a. American Gypsum Company; M-Bloc.

b. American Gypsum Company; M-Bloc Type X.
c. Continental Building Products; Mold Defense.
d. Continental Building Products; Mold Defense Type X.
e. Georgia-Pacific Gypsum; ToughRock Mold-Guard.
f. Georgia-Pacific Gypsum; ToughRock Fireguard X Mold-Guard.
g. Substitutions: See Section 01 60 00 - Product Requirements.

B. Ceiling Board: Special sag resistant gypsum ceiling board as defined in ASTM C1396/C1396M; sizes to minimize joints in place; ends square cut.
1. Application: Ceilings, unless otherwise indicated.
2. Thickness: 1/2 inch.
3. Edges: Tapered.

2.04 ACCESSORIES

A. Acoustic Insulation: ASTM C665; preformed glass fiber, friction fit type, unfaced. Thickness: to match wall thickness.

B. Acoustic Sealant: Acrylic emulsion latex or water-based elastomeric sealant; do not use solvent-based non-curing butyl sealant.

C. Beads, Joint Accessories, and Other Trim: ASTM C1047, rigid plastic, galvanized steel, or rolled zinc, unless noted otherwise.
1. Rigid Corner Beads: Low profile, for 90 degree outside corners.
a. Products:
1) Phillips Manufacturing Co; Everlast Corner Bead: www.phillipsmfg.com/#sle.
2) Trim-Tex, Inc: www.trim-tex.com/#sle.
3) Substitutions: See Section 01 60 00 - Product Requirements.

D. Textured Finish Materials: Latex-based compound; plain.

E. Screws for Fastening of Gypsum Panel Products to Cold-Formed Steel Studs Less than 0.033 inch in Thickness and Wood Members: ASTM C1002; self-piercing tapping screws, corrosion resistant.

F. Screws for Fastening of Gypsum Panel Products to Steel Members from 0.033 to 0.112 inch in Thickness: ASTM C954; steel drill screws, corrosion resistant.

PART 3 EXECUTION

3.01 EXAMINATION

A. Verify that project conditions are appropriate for work of this section to commence.

3.02 FRAMING INSTALLATION

A. Metal Framing: Install in accordance with ASTM C754 and manufacturer's instructions.

B. Suspended Ceilings and Soffits: Space framing and furring members as indicated.

C. Studs: Space studs at 16 inches on center.
1. Extend partition framing to structure where indicated and to ceiling in other locations.
2. Partitions Terminating at Ceiling: Attach ceiling runner securely to ceiling track in accordance with manufacturer's instructions.
3. Partitions Terminating at Structure: Attach extended leg top runner to structure, maintain clearance between top of studs and structure, and brace both flanges of studs with continuous bridging.

D. Openings: Reinforce openings as required for weight of doors or operable panels, using not less than double studs at jambs.

E. Standard Wall Furring: Install at concrete walls scheduled to receive gypsum board, not more than 4 inches from floor and ceiling lines and abutting walls. Secure in place on alternate channel flanges at maximum 24 inches on center.

3.03 ACOUSTIC ACCESSORIES INSTALLATION

A. Acoustic Insulation: Place tightly within spaces, around cut openings, behind and around electrical and mechanical items within partitions, and tight to items passing through partitions.

B. Acoustic Sealant: Install in accordance with manufacturer's instructions.

3.04 BOARD INSTALLATION

A. Comply with ASTM C840, GA-216, and manufacturer's instructions. Install to minimize butt end joints, especially in highly visible locations.

3.05 TEXTURE FINISH

A. Apply finish texture coating by means of spraying apparatus in accordance with manufacturer's instructions and to match approved sample.

END OF SECTION

SECTION 09 51 00
ACOUSTICAL CEILINGS

PART 1 GENERAL

1.01 SECTION INCLUDES

A. Suspended metal grid ceiling system.

B. Acoustical units.

1.02 REFERENCE STANDARDS

A. ASTM C635/C635M - Standard Specification for the Manufacture, Performance, and Testing of Metal Suspension Systems for Acoustical Tile and Lay-in Panel Ceilings; 2017.

B. ASTM C636/C636M - Standard Practice for Installation of Metal Ceiling Suspension Systems for Acoustical Tile and Lay-In Panels; 2013.

C. ASTM E580/E580M - Standard Practice for Installation of Ceiling Suspension Systems for Acoustical Tile and Lay-in Panels in Areas Subject to Earthquake Ground Motions; 2017.

D. ASTM E1264 - Standard Classification for Acoustical Ceiling Products; 2014.

1.03 ADMINISTRATIVE REQUIREMENTS

A. Sequence work to ensure acoustical ceilings are not installed until building is enclosed, sufficient heat is provided, dust generating activities have terminated, and overhead work is completed, tested, and approved.

B. Do not install acoustical units until after interior wet work is dry.

1.04 SUBMITTALS

A. See Section 01 30 00 - Administrative Requirements, for submittal procedures.

B. Product Data: Provide data on suspension system components.

C. Maintenance Materials: Furnish the following for Owner's use in maintenance of project.
   1. See Section 01 60 00 - Product Requirements, for additional provisions.
   2. Extra Acoustical Units: Quantity equal to 5 percent of total installed.

PART 2 PRODUCTS

2.01 MANUFACTURERS

A. Acoustic Tiles/Panels:
   1. Armstrong World Industries, Inc: www.armstrong.com.
   2. Acoustic Ceiling Products, Inc: www.acpideas.com.
   3. CertainTeed Corporation: www.certainteed.com.
   4. USG: www.usg.com.
   5. Substitutions: See Section 01 60 00 - Product Requirements.

2.02 ACOUSTICAL UNITS

A. Acoustical Panels: Painted mineral fiber, ASTM E1264 Type III, with the following characteristics:
   1. Size: 24 by 24 inches.
   2. Thickness: 3/4 inches.
   3. Composition: Wet felted.
   4. Edge: Square.
   5. Surface Color: White.
   6. Surface Pattern: Fine texture.
   7. Suspension System: Exposed grid.

2.03 SUSPENSION SYSTEM(S)

A. Metal Suspension Systems - General: Complying with ASTM C635/C635M; die cut and interlocking components, with stabilizer bars, clips, splices, perimeter moldings, and hold down clips as required.

B. Exposed Steel Suspension System: Formed steel, commercial quality cold rolled; heavy-duty.
   1. Profile: Tee; 15/16 inch wide face.
   2. Finish: White painted.

2.04 ACCESSORIES

A. Support Channels and Hangers: Galvanized steel; size and type to suit application, seismic requirements, and ceiling system flatness requirement specified.

B. Perimeter Moldings: Same material and finish as grid.
   1. At Exposed Grid: Provide L-shaped molding for mounting at same elevation as face of grid.

C. Gypsum Board: Fire rated type; 5/8 inch thick, ends and edges square, paper faced.

D. Touch-up Paint: Type and color to match acoustical and grid units.

PART 3 EXECUTION

3.01 EXAMINATION

A. Verify existing conditions before starting work.

B. Verify that layout of hangers will not interfere with other work.

3.02 INSTALLATION - SUSPENSION SYSTEM

A. Install suspension system in accordance with ASTM C636/C636M, ASTM E580/E580M, and manufacturer's instructions and as supplemented in this section.

B. Rigidly secure system, including integral mechanical and electrical components, for maximum deflection of 1:360.

C. Install after major above-ceiling work is complete. Coordinate the location of hangers with other work.

D. Hang suspension system independent of walls, columns, ducts, pipes and conduit. Where carrying members are spliced, avoid visible displacement of face plane of adjacent members.

E. Where ducts or other equipment prevent the regular spacing of hangers, reinforce the nearest affected hangers and related carrying channels to span the extra distance.

F. Do not support components on main runners or cross runners if weight causes total dead load to exceed deflection capability.

G. Support fixture loads using supplementary hangers located within 6 inches of each corner, or support components independently.

H. Do not eccentrically load system or induce rotation of runners.

I. Perimeter Molding: Install at intersection of ceiling and vertical surfaces and at junctions with other interruptions.
   1. Use longest practical lengths.
   2. Overlap and rivet corners.

3.03 INSTALLATION - ACOUSTICAL UNITS

A. Install acoustical units in accordance with manufacturer's instructions.

B. Fit acoustical units in place, free from damaged edges or other defects detrimental to appearance and function.

C. Fit border trim neatly against abutting surfaces.

D. Install units after above-ceiling work is complete.

E. Install acoustical units level, in uniform plane, and free from twist, warp, and dents.

F. Cutting Acoustical Units:
   1. Make field cut edges of same profile as factory edges.

3.04 TOLERANCES

A. Maximum Variation from Flat and Level Surface: 1/8 inch in 10 feet.

B. Maximum Variation from Plumb of Grid Members Caused by Eccentric Loads: 2 degrees.

END OF SECTION

SECTION 09 65 00
RESILIENT FLOORING

PART 1 GENERAL

1.01 SECTION INCLUDES

A. Resilient tile flooring.

B. Resilient base.

C. Installation accessories.

1.02 SUBMITTALS

A. See Section 01 30 00 - Administrative Requirements, for submittal procedures.

B. Product Data: Provide data on specified products, describing physical and performance characteristics; including sizes, patterns and colors available; and installation instructions.

C. Maintenance Data: Include maintenance procedures, recommended maintenance materials, and suggested schedule for cleaning, stripping, and re-waxing.

D. Maintenance Materials: Furnish the following for Owner's use in maintenance of project.
   1. See Section 01 60 00 - Product Requirements, for additional provisions.
   2. Extra Flooring Material: 10 square feet of each type and color.
   3. Extra Wall Base: 25 linear feet of each type and color.

1.03 DELIVERY, STORAGE, AND HANDLING

A. Upon receipt, immediately remove any shrink-wrap and check materials for damage and the correct style, color, quantity and run numbers.

B. Store all materials off of the floor in an acclimatized, weather-tight space.

C. Maintain temperature in storage area between 55 degrees F and 90 degrees F.

D. Protect roll materials from damage by storing on end.

1.04 FIELD CONDITIONS

A. Store materials for not less than 48 hours prior to installation in area of installation at a temperature of 70 degrees F to achieve temperature stability. Thereafter, maintain conditions above 55 degrees F.

PART 2 PRODUCTS

2.01 TILE FLOORING

A. Vinyl Composition Tile: Homogeneous, with color extending throughout thickness.
   1. Manufacturers:
      a. Armstrong World Industries, Inc: www.armstrong.com.
      b. Johnsonite, a Tarkett Company: www.johnsonite.com.
      c. Mannington Mills, Inc: www.mannington.com.
      d. Substitutions: See Section 01 60 00 - Product Requirements.
   2. Minimum Requirements: Comply with ASTM F1066, of Class corresponding to type specified.
   3. Size: 12 by 12 inch.
   4. Thickness: 0.125 inch.
   5. Color: To be selected by Architect from manufacturer's full range.

2.02 RESILIENT BASE

A. Resilient Base: ASTM F1861, Type TS rubber, vulcanized thermoset; top set Style B, Cove.
   1. Manufacturers:
      a. Burke Flooring: www.burkeflooring.com/#sle.
      b. Johnsonite, a Tarkett Company: www.johnsonite.com.
      c. Roppe Corp: www.roppe.com.
      d. Substitutions: See Section 01 60 00 - Product Requirements.

2. Height: 6 inch.
3. Thickness: 0.125 inch.
4. Finish: Satin.
5. Color: To be selected by Architect from manufacturer's full range.
6. Accessories: Premolded external corners and internal corners.

2.03 ACCESSORIES

A. Subfloor Filler: White premix latex; type recommended by adhesive material manufacturer.

B. Primers, Adhesives, and Seam Sealer: Waterproof; types recommended by flooring manufacturer.

PART 3 EXECUTION

3.01 EXAMINATION

A. Verify that surfaces are flat to tolerances acceptable to flooring manufacturer, free of cracks that might telegraph through flooring, clean, dry, and free of curing compounds, surface hardeners, and other chemicals that might interfere with bonding of flooring to substrate.

B. Verify that wall surfaces are smooth and flat within the tolerances specified for that type of work, are dust-free, and are ready to receive resilient base.

C. Cementitious Sub-floor Surfaces: Verify that substrates are dry enough and ready for resilient flooring installation by testing for moisture and pH.
   1. Obtain instructions if test results are not within limits recommended by resilient flooring manufacturer and adhesive materials manufacturer.

D. Verify that required floor-mounted utilities are in correct location.

3.02 PREPARATION

A. Remove sub-floor ridges and bumps. Fill minor low spots, cracks, joints, holes, and other defects with sub-floor filler to achieve smooth, flat, hard surface.

B. Prohibit traffic until filler is fully cured.

3.03 INSTALLATION - GENERAL

A. Starting installation constitutes acceptance of sub-floor conditions.

B. Install in accordance with manufacturer's written instructions.

C. Spread only enough adhesive to permit installation of materials before initial set.

D. Fit joints and butt seams tightly.

E. Set flooring in place, press with heavy roller to attain full adhesion.

F. Where type of floor finish, pattern, or color are different on opposite sides of door, terminate flooring under centerline of door.

G. Install edge strips at unprotected or exposed edges, where flooring terminates, and where indicated.

H. Scribe flooring to walls, columns, cabinets, floor outlets, and other appurtenances to produce tight joints.

3.04 INSTALLATION - TILE FLOORING

A. Mix tile from container to ensure shade variations are consistent when tile is placed, unless otherwise indicated in manufacturer's installation instructions.

B. Lay flooring with joints and seams parallel to building lines to produce symmetrical pattern.

C. Install square tile to ashlar pattern. Allow minimum 1/2 full size tile width at room or area perimeter.

3.05 INSTALLATION - RESILIENT BASE

A. Fit joints tightly and make vertical. Maintain minimum dimension of 18 inches between joints.

B. Install base on solid backing. Bond tightly to wall and floor surfaces.

3.06 CLEANING

A. Remove excess adhesive from floor, base, and wall surfaces without damage.

B. Clean in accordance with manufacturer's written instructions.

3.07 PROTECTION

A. Prohibit traffic on resilient flooring for 48 hours after installation.

END OF SECTION

SECTION 09 68 13
TILE CARPETING

PART 1 GENERAL

1.01 SECTION INCLUDES

A. Carpet tile, fully adhered.

B. Removal of existing carpet tile.

1.02 REFERENCE STANDARDS

A. CRI 104 - Standard for Installation of Commercial Carpet; 2015.

1.03 SUBMITTALS

A. See Section 01 30 00 - Administrative Requirements, for submittal procedures.

B. Product Data: Provide data on specified products, describing physical and performance characteristics; sizes, patterns, colors available, and method of installation.

C. Maintenance Data: Include maintenance procedures, recommended maintenance materials, and suggested schedule for cleaning.

1.04 FIELD CONDITIONS

A. Store materials in area of installation for minimum period of 24 hours prior to installation.

PART 2 PRODUCTS

2.01 MANUFACTURERS

A. Tile Carpeting:
   1. Interface, Inc: www.interfaceinc.com.
   2. Tandus: www.tandus.com.
   3. Substitutions: See Section 01 60 00 - Product Requirements.

2.02 MATERIALS

A. Tile Carpeting: Tufted, manufactured in one color dye lot.

2.03 ACCESSORIES

A. Sub-Floor Filler: White premix latex; type recommended by flooring material manufacturer.

B. Edge Strips: Embossed aluminum, _____ color.

C. Carpet Tile Adhesive: Recommended by carpet tile manufacturer; releasable type.

PART 3 EXECUTION

3.01 EXAMINATION

A. Verify that sub-floor surfaces are smooth and flat within tolerances specified for that type of work and are ready to receive carpet tile.

B. Cementitious Sub-floor Surfaces: Verify that substrates are dry enough and ready for flooring installation by testing for moisture and pH.
   1. Obtain instructions if test results are not within limits recommended by flooring material manufacturer and adhesive materials manufacturer.

3.02 PREPARATION

A. Remove existing carpet tile.

B. Prepare floor substrates as recommended by flooring and adhesive manufacturers.

C. Remove sub-floor ridges and bumps. Fill minor or local low spots, cracks, joints, holes, and other defects with sub-floor filler.

D. Apply, trowel, and float filler to achieve smooth, flat, hard surface. Prohibit traffic until filler is cured.

E. Vacuum clean substrate.

3.03 INSTALLATION

A. Starting installation constitutes acceptance of sub-floor conditions.

B. Install carpet tile in accordance with manufacturer's instructions.

C. Blend carpet from different cartons to ensure minimal variation in color match.

D. Cut carpet tile clean. Fit carpet tight to intersection with vertical surfaces without gaps.

E. Lay carpet tile in square pattern, with pile direction parallel to next unit, set parallel to building lines.

F. Locate change of color or pattern between rooms under door centerline.

G. Fully adhere carpet tile to substrate.

H. Trim carpet tile neatly at walls and around interruptions.

I. Complete installation of edge strips, concealing exposed edges.

3.04 CLEANING

A. Remove excess adhesive without damage, from floor, base, and wall surfaces.

B. Clean and vacuum carpet surfaces.

END OF SECTION

SECTION 09 91 23
INTERIOR PAINTING

PART 1 GENERAL

1.01 SECTION INCLUDES

A. Surface preparation.

B. Field application of paints, stains, and varnishes.

C. Scope: Finish interior surfaces exposed to view, unless fully factory-finished and unless otherwise indicated.

D. Do Not Paint or Finish the Following Items:
   1. Items factory-finished unless otherwise indicated; materials and products having factory-applied primers are not considered factory finished.
   2. Items indicated to receive other finishes.
   3. Items indicated to remain unfinished.
   4. Fire rating labels, equipment serial number and capacity labels, bar code labels, and operating parts of equipment.
   5. Floors, unless specifically indicated.
   6. Glass.
   7. Concealed pipes, ducts, and conduits.

1.02 SUBMITTALS

A. See Section 01 30 00 - Administrative Requirements, for submittal procedures.

B. Product Data: Provide complete list of products to be used, with the following information for each:
   1. Manufacturer's name, product name and/or catalog number, and general product category (e.g. "alkyd enamel").
   2. MPI product number (e.g. MPI #47).
   3. Cross-reference to specified paint system(s) product is to be used in; include description of each system.

1.03 DELIVERY, STORAGE, AND HANDLING

A. Deliver products to site in sealed and labeled containers; inspect to verify acceptability.

B. Container Label: Include manufacturer's name, type of paint, brand name, lot number, brand code, coverage, surface preparation, drying time, cleanup requirements, color designation, and instructions for mixing and reducing.

C. Paint Materials: Store at minimum ambient temperature of 45 degrees F and a maximum of 90 degrees F, in ventilated area, and as required by manufacturer's instructions.

1.04 FIELD CONDITIONS

A. Do not apply materials when surface and ambient temperatures are outside the temperature ranges required by the paint product manufacturer.

B. Follow manufacturer's recommended procedures for producing best results, including testing of substrates, moisture in substrates, and humidity and temperature limitations.

C. Provide lighting level of 80 ft candles measured mid-height at substrate surface.

PART 2 PRODUCTS

2.01 MANUFACTURERS

A. Provide paints and finishes from the same manufacturer to the greatest extent possible.
   1. In the event that a single manufacturer cannot provide specified products, minor exceptions will be permitted provided approval by Architect is obtained using the specified procedures for substitutions.

B. Paints:
   1. Behr Process Corporation: www.behr.com.

2. PPG Paints: www.ppgpaints.com/sle.
3. Sherwin-Williams Company: www.sherwin-williams.com.

C. Transparent Finishes:
1. Behr Process Corporation: www.behr.com.
2. PPG Paints Deft Interior Clears/Polyurethanes: www.ppgpaints.com/sle.
3. Sherwin-Williams Company: www.sherwin-williams.com.

D. Stains:
1. Behr Process Corporation: www.behr.com.
2. PPG Paints Deft Interior Stains: www.ppgpaints.com/sle.
3. Sherwin-Williams Company: www.sherwin-williams.com.

E. Substitutions: See Section 01 60 00 - Product Requirements.

2.02 PAINTS AND FINISHES - GENERAL

A. Paints and Finishes: Ready mixed, unless intended to be a field-catalyzed paint.
1. Provide paints and finishes of a soft paste consistency, capable of being readily and uniformly dispersed to a homogeneous coating, with good flow and brushing properties, and capable of drying or curing free of streaks or sags.
2. Supply each paint material in quantity required to complete entire project's work from a single production run.
3. Do not reduce, thin, or dilute paint or finishes or add materials unless such procedure is specifically described in manufacturer's product instructions.

2.03 PRIMERS

A. Primers: Provide the following unless other primer is required or recommended by manufacturer of top coats.
1. Interior Institutional Low Odor/VOC Primer Sealer; MPI #149.
2. Interior Latex Primer Sealer; MPI #50.

PART 3 EXECUTION

3.01 EXAMINATION

A. Verify that surfaces are ready to receive work as instructed by the product manufacturer.

B. Examine surfaces scheduled to be finished prior to commencement of work. Report any condition that may potentially effect proper application.

C. Test shop-applied primer for compatibility with subsequent cover materials.

3.02 PREPARATION

A. Clean surfaces thoroughly and correct defects prior to application.

B. Prepare surfaces using the methods recommended by the manufacturer for achieving the best result for the substrate under the project conditions.

C. Remove or mask surface appurtenances, including electrical plates, hardware, light fixture trim, escutcheons, and fittings, prior to preparing surfaces or finishing.

D. Seal surfaces that might cause bleed through or staining of topcoat.

3.03 APPLICATION

A. Apply products in accordance with manufacturer's written instructions and recommendations in "MPI Architectural Painting Specification Manual".

B. Do not apply finishes to surfaces that are not dry. Allow applied coats to dry before next coat is applied.

C. Apply each coat to uniform appearance in thicknesses specified by manufacturer.

D. Vacuum clean surfaces of loose particles. Use tack cloth to remove dust and particles just prior to applying next coat.

E. Reinstall electrical cover plates, hardware, light fixture trim, escutcheons, and fittings removed prior to finishing.

END OF SECTION

SECTION 10 14 00
SIGNAGE

PART 1 GENERAL

1.01 SECTION INCLUDES

A. Room and door signs.

1.02 REFERENCE STANDARDS

A. 36 CFR 1191 - Americans with Disabilities Act (ADA) Accessibility Guidelines for Buildings and Facilities; Architectural Barriers Act (ABA) Accessibility Guidelines; current edition.

B. ADA Standards - Americans with Disabilities Act (ADA) Standards for Accessible Design; 2010.

C. ICC A117.1 - Accessible and Usable Buildings and Facilities; 2017.

1.03 SUBMITTALS

A. See Section 01 30 00 - Administrative Requirements, for submittal procedures.

B. Product Data: Manufacturer's printed product literature for each type of sign, indicating sign styles, font, foreground and background colors, locations, overall dimensions of each sign.

C. Signage Schedule: Provide information sufficient to completely define each sign for fabrication, including room number, room name, other text to be applied, sign and letter sizes, fonts, and colors.
   1. When room numbers to appear on signs differ from those on drawings, include the drawing room number on schedule.
   2. Submit for approval by Owner through Architect prior to fabrication.

1.04 FIELD CONDITIONS

A. Do not install tape adhesive when ambient temperature is lower than recommended by manufacturer.

B. Maintain this minimum temperature during and after installation of signs.

PART 2 PRODUCTS

2.01 MANUFACTURERS

A. Flat Signs:
   1. Best Sign Systems, Inc: www.bestsigns.com.
   2. Cosco Industries (ADA signs); ADA Series 1: www.coscoarchitecturalsigns.com.

2.02 SIGNAGE APPLICATIONS

A. Accessibility Compliance: Signs are required to comply with ADA Standards and ICC A117.1 and applicable building codes, unless otherwise indicated; in the event of conflicting requirements, comply with the most comprehensive and specific requirements.

B. Room and Door Signs: Provide a sign for every doorway, whether it has a door or not, not including corridors, lobbies, and similar open areas.
   1. Sign Type: Flat signs with engraved panel media as specified.
   2. Provide "tactile" signage, with letters raised minimum 1/32 inch and Grade II braille.
   3. Character Height: 1 inch.
   4. Sign Height: 2 inches, unless otherwise indicated.
   5. Office Doors: Identify with the room numbers indicated on drawings.
   6. Rest Rooms: Identify with pictograms, the names "MEN" and "WOMEN", and braille.

2.03 SIGN TYPES

A. Flat Signs: Signage media without frame.
   1. Edges: Square.
   2. Corners: Square.
   3. Wall Mounting of One-Sided Signs: Tape adhesive.

B. Color and Font: Unless otherwise indicated:

1. Character Font: Helvetica, Arial, or other sans serif font.
2. Character Case: Upper case only.
3. Background Color: Clear.
4. Character Color: Contrasting color.

2.04 TACTILE SIGNAGE MEDIA

A. Engraved Panels: Laminated colored plastic; engraved through face to expose core as background color:
   1. Total Thickness: 1/16 inch.

PART 3 EXECUTION

3.01 EXAMINATION

A. Verify that substrate surfaces are ready to receive work.

3.02 INSTALLATION

A. Install in accordance with manufacturer's instructions.

B. Install neatly, with horizontal edges level.

C. Protect from damage until Substantial Completion; repair or replace damaged items.

END OF SECTION

SECTION 10 21 13.16
PLASTIC-LAMINATE-CLAD TOILET COMPARTMENTS

PART 1 GENERAL

1.01 SECTION INCLUDES

A. Plastic laminate toilet compartments.

B. Urinal and Vestibule screens.

1.02 RELATED REQUIREMENTS

A. Section 06 10 00 - Rough Carpentry: Blocking and supports.

B. Section 10 28 00 - Toilet, Bath, and Laundry Accessories.

1.03 REFERENCE STANDARDS

A. ANSI A208.1 - American National Standard for Particleboard; 2009.

B. NEMA LD 3 - High-Pressure Decorative Laminates; 2005.

1.04 ADMINISTRATIVE REQUIREMENTS

A. Coordination: Coordinate the work with placement of support framing and anchors in walls and ceilings.

1.05 SUBMITTALS

A. See Section 01 30 00 - Administrative Requirements, for submittal procedures.

B. Shop Drawings: Indicate partition plan, elevation views, dimensions, details of wall supports, door swings.

C. Product Data: Provide data on panel construction, hardware, and accessories.

PART 2 PRODUCTS

2.01 MANUFACTURERS

A. Plastic Laminate Toilet Compartments:
   1. General Partitions Mfg. Corp: www.generalpartitions.com.
   2. Substitutions: Section 01 60 00 - Product Requirements.

2.02 MATERIALS

A. Particleboard for Core: ANSI A208.1; composed of wood chips, sawdust or flakes, made with waterproof resin binder; of grade to suit application; sanded faces.

B. Plastic Laminate: NEMA LD 3, HGS.

2.03 COMPONENTS

A. Toilet Compartments: Plastic laminate finished, floor-mounted unbraced.

B. Doors, Panels, and Pilasters: Plastic laminate adhesive and pressure bonded to faces and edges of particleboard core, with beveled corners and edges; edges of cut-outs sealed.

2.04 ACCESSORIES

A. Pilaster Shoes: Formed chromed steel with polished finish, 3 inches high, concealing floor fastenings.

B. Wall and Pilaster Brackets: Polished stainless steel.

C. Hardware: Polished stainless steel:
   1. Pivot hinges, gravity type, adjustable for door close positioning; two per door.
   2. Thumb turn door latch with exterior emergency access feature.
   3. Door strike and keeper with rubber bumper; mounted on pilaster in alignment with door latch.
   4. Coat hook with rubber bumper; one per compartment, mounted on door.
   5. Provide door pull for outswinging doors.

PART 3 EXECUTION

3.01 EXAMINATION

A. Verify that field measurements are as indicated.

B. Verify correct spacing of and between plumbing fixtures.

C. Verify correct location of built-in framing, anchorage, and bracing.

3.02 INSTALLATION

A. Install partitions secure, rigid, plumb, and level in accordance with manufacturer's instructions.

B. Maintain 3/8 to 1/2 inch space between wall and panels and between wall and end pilasters.

C. Attach panel brackets securely to walls using anchor devices.

D. Attach panels and pilasters to brackets. Locate head rail joints at pilaster center lines.

E. Field touch-up of scratches or damaged finish will not be permitted. Replace damaged or scratched materials with new materials.

3.03 TOLERANCES

A. Maximum Variation From Plumb: 1/8 inch.

3.04 ADJUSTING

A. Adjust and align hardware to uniform clearance at vertical edge of doors, not exceeding 3/16 inch.

B. Adjust hinges to position doors in partial opening position when unlatched. Return out-swinging doors to closed position.

C. Adjust adjacent components for consistency of line or plane.

END OF SECTION

SECTION 10 26 00
WALL AND DOOR PROTECTION

PART 1 GENERAL

1.01 SECTION INCLUDES

A. Corner guards.

1.02 RELATED REQUIREMENTS

A. Section 06 10 00 - Rough Carpentry: Blocking for wall and corner guard anchors.

B. Section 08 71 00 - Door Hardware: Standard protection plates and trim.

C. Section 09 21 16 - Gypsum Board Assemblies: Placement of supports in stud wall construction.

1.03 REFERENCE STANDARDS

A. ASTM D256 - Standard Test Methods for Determining the Izod Pendulum Impact Resistance of Plastics; 2010, with Editorial Revision (2015).

B. ASTM D543 - Standard Practices for Evaluating the Resistance of Plastics to Chemical Reagents; 2014.

C. ASTM E84 - Standard Test Method for Surface Burning Characteristics of Building Materials; 2017.

D. ASTM F476 - Standard Test Methods for Security of Swinging Door Assemblies; 2014.

1.04 SUBMITTALS

A. See Section 01 30 00 - Administrative Requirements, for submittal procedures.

B. Product Data: Indicate physical dimensions, features, wall mounting brackets with mounted measurements, anchorage details, and rough-in measurements.

C. Shop Drawings: Include plans, elevation, sections, and attachment details. Show design and spacing of supports for protective corridor handrails, required to withstand structural loads.

D. Warranty Documentation: Submit manufacturer warranty and ensure that forms have been completed in Owner's name and registered with manufacturer.

E. Maintenance Materials: Furnish the following for Owner's use in maintenance of project:
   1. See Section 01 60 00 - Product Requirements, for additional provisions.

1.05 DELIVERY, STORAGE, AND HANDLING

A. Deliver wall and door protection items in original, undamaged protective packaging. Label items to designate installation locations.

B. Protect work from moisture damage.

C. Protect work from UV light damage.

D. Do not deliver products to project site until areas for storage and installation are fully enclosed, and interior temperature and humidity are in conformance with manufacturer's recommendations for each type of item.

E. Store products in either horizontal or vertical position, in conformance with manufacturer's instructions.

1.06 WARRANTY

A. See Section 01 78 00 - Closeout Submittals, for additional warranty requirements.

PART 2 PRODUCTS

2.01 MANUFACTURERS

A. Bumper Rails, Crash Rails, Protective Corridor Handrails, and Corner Guards:
   1. Babcock-Davis: www.babcockdavis.com/sle.
   2. Construction Specialties, Inc: www.c-sgroup.com.
   3. Inpro: www.inprocorp.com.

4. Koroseal Interior Products: www.koroseal.com.
5. Substitutions: See Section 01 60 00 - Product Requirements.

2.02 PERFORMANCE CRITERIA

A. Impact Strength: Unless otherwise noted, provide protection products and assemblies that have been successfully tested for conformance to applicable provisions of ASTM D256 and/or ASTM F476.

B. Chemical and Stain Resistance: Unless otherwise noted, provide protection products and assemblies with chemical and stain resistance conforming to applicable provisions of ASTM D543.

2.03 PRODUCT TYPES

A. Corner Guards - Surface Mounted:
1. Material: High impact vinyl with full height extruded aluminum retainer.
2. Performance: Resist lateral impact force of 100 lbs at any point without damage or permanent set.
3. Surface Burning Characteristics: Provide assemblies with flame spread index of 25 or less and smoke developed index of 450 or less, when tested in accordance with ASTM E84.
4. Width of Wings: 2 inches.
5. Corner: Square.
6. Color: As selected from manufacturer's standard colors.
7. Length: One piece.
8. Preformed end caps.

2.04 FABRICATION

A. Fabricate components with tight joints, corners and seams.

B. Pre-drill holes for attachment.

2.05 SOURCE QUALITY CONTROL

A. See Section 01 40 00 - Quality Requirements, for additional requirements.

B. Provide wall and door protection systems of each type from a single source and manufacturer.

PART 3 EXECUTION

3.01 EXAMINATION

A. Verify that rough openings, concealed blocking, and anchors are correctly sized and located.

B. Verify that field measurements are as indicated on drawings.

C. Verify that substrate surfaces for adhered items are clean and smooth.

D. Start of installation constitutes acceptance of project conditions.

3.02 INSTALLATION

A. Install components in accordance with manufacturer's instructions, level and plumb, secured rigidly in position to supporting construction.

B. Position corner guard 4 inches above finished floor to ____ inches high.

3.03 TOLERANCES

A. Maximum Variation From Required Height: 1/4 inch.

B. Maximum Variation From Level or Plane For Visible Length: 1/4 inch.

3.04 CLEANING

A. Clean wall and door protection items of excess adhesive, dust, dirt, and other contaminants.

END OF SECTION

SECTION 10 28 00
TOILET, BATH, AND LAUNDRY ACCESSORIES

PART 1 GENERAL

1.01 SECTION INCLUDES

A. Commercial toilet accessories.

B. Diaper changing stations.

1.02 RELATED REQUIREMENTS

A. Section 08 83 00 - Mirrors: Other mirrors.

B. Section 10 21 13.16 - Plastic-Laminate-Clad Toilet Compartments.

1.03 REFERENCE STANDARDS

A. ASTM C1036 - Standard Specification for Flat Glass; 2016.

B. ASTM C1503 - Standard Specification for Silvered Flat Glass Mirror; 2008 (Reapproved 2013).

C. ASTM F2285 - Standard Consumer Safety Performance Specification for Diaper Changing Tables for Commercial Use; 2004, with Editorial Revision (2016).

1.04 ADMINISTRATIVE REQUIREMENTS

A. Coordinate the work with the placement of internal wall reinforcement, concealed ceiling supports, and reinforcement of toilet partitions to receive anchor attachments.

1.05 SUBMITTALS

A. See Section 01 30 00 - Administrative Requirements, for submittal procedures.

B. Product Data: Submit data on accessories describing size, finish, details of function, and attachment methods.

PART 2 PRODUCTS

2.01 MANUFACTURERS

A. Commercial Toilet, Shower, and Bath Accessories:
   1. AJW Architectural Products: www.ajw.com.
   2. Bradley Corporation: www.bradleycorp.com.
   3. Substitutions: Section 01 60 00 - Product Requirements.

B. Diaper Changing Stations:
   1. American Specialties, Inc: www.americanspecialties.com.
   2. Bradley Corporation: www.bradleycorp.com.
   3. Koala Kare Products: www.koalabear.com.
   4. Substitutions: 01 60 00 - Product Requirements.

2.02 MATERIALS

A. Accessories - General: Shop assembled, free of dents and scratches and packaged complete with anchors and fittings, steel anchor plates, adapters, and anchor components for installation.
   1. Grind welded joints smooth.
   2. Fabricate units made of metal sheet of seamless sheets, with flat surfaces.

B. Keys: Provide 2 keys for each accessory to Owner; master key lockable accessories.

C. Mirror Glass: Annealed float glass, ASTM C1036 Type I, Class 1, Quality Q2, with silvering, protective and physical characteristics complying with ASTM C1503.

2.03 FINISHES

A. Stainless Steel: Satin finish, unless otherwise noted.

2.04 COMMERCIAL TOILET ACCESSORIES

A. Toilet Paper Dispenser: Double roll, surface mounted bracket type, stainless steel.

B. Combination Towel Dispenser/Waste Receptacle: Semi-Recessedwith projecting waste receptacle, stainless steel; seamless wall flanges, continuous piano hinges.
   1. Waste receptacle liner: Reusable, heavy-duty vinyl.
   2. Towel dispenser capacity: 400 C-fold.
   3. Waste receptacle capacity: 4 gallons.

C. Automated Soap Dispenser: Liquid soap dispenser, wall-mounted, with stainless steel cover and window to gauge soap level, tumbler lock.

D. Mirrors: Stainless steel framed, 1/4 inch thick annealed float glass; ASTM C1036.
   1. Size: 24X36.
   2. Frame: 0.05 inchangle shapes, with mitered and welded and ground corners, and tamperproof hanging system; satin finish.

E. Seat Cover Dispenser: Stainless steel, surface-mounted, reloading by concealed opening at base, tumbler lock.
   1. Minimum capacity: 250 seat covers.

F. Grab Bars: Stainless steel, peened surface.
   1. Standard Duty Grab Bars:
      a. Push/Pull Point Load: 250 pound-force, minimum.
      b. Dimensions: 1-1/4 inch outside diameter, minimum 0.05 inch wall thickness, exposed flange mounting, 1-1/2 inch clearance between wall and inside of grab bar.
      c. Finish: Satin.
      d. Length and Configuration: As indicated on drawings.
      e. Products:
         1) Seachrome Corporation: www.seachrome.com/#sle.
         2) Substitutions: Section 01 60 00 - Product Requirements.

G. Sanitary Napkin Disposal Unit: Stainless steel, surface-mounted, self-closing door, locking bottom panel with full-length stainless steel piano-type hinge, removable receptacle.

2.05 DIAPER CHANGING STATIONS

A. Diaper Changing Station: Wall-mounted folding diaper changing station for use in commercial toilet facilities, meeting or exceeding ASTM F2285.
   1. Material: Polyethylene.
   2. Mounting: Surface.
   3. Minimum Rated Load: 250 pounds.
   4. Products:
      a. Koala Kare Products.
      b. Substitutions: 01 60 00 - Product Requirements.

PART 3 EXECUTION

3.01 EXAMINATION

A. Verify existing conditions before starting work.

B. Verify exact location of accessories for installation.

C. Verify that field measurements are as indicated on drawings.

3.02 PREPARATION

A. Deliver inserts and rough-in frames to site for timely installation.

3.03 INSTALLATION

A. Install accessories in accordance with manufacturers' instructions in locations indicated on the drawings.

B. Install plumb and level, securely and rigidly anchored to substrate.

C. Mounting Heights: As required by accessibility regulations, unless otherwise indicated.

3.04 PROTECTION

A. Protect installed accessories from damage due to subsequent construction operations.

END OF SECTION

SECTION 12 36 00
COUNTERTOPS

PART 1 GENERAL

1.01 SECTION INCLUDES

A. Wall-hung counters and vanity tops.

1.02 RELATED REQUIREMENTS

A. Section 22 40 00 - Plumbing Fixtures: Sinks.

1.03 REFERENCE STANDARDS

A. ISFA 2-01 - Classification and Standards for Solid Surfacing Material; 2013.

B. NEMA LD 3 - High-Pressure Decorative Laminates; 2005.

1.04 SUBMITTALS

A. See Section 01 30 00 - Administrative Requirements, for submittal procedures.

B. Product Data: Manufacturer's data sheets on each product to be used, including:
   1. Preparation instructions and recommendations.
   2. Storage and handling requirements and recommendations.
   3. Specimen warranty.

C. Shop Drawings: Complete details of materials and installation; combine with shop drawings of cabinets and casework specified in other sections.

D. Test Reports: Chemical resistance testing, showing compliance with specified requirements.

E. Maintenance Data: Manufacturer's instructions and recommendations for maintenance and repair of countertop surfaces.

1.05 QUALITY ASSURANCE

A. Installer Qualifications: Company specializing in performing work of the type specified in this section, with not less than three years of documented experience.

1.06 DELIVERY, STORAGE, AND HANDLING

A. Store products in manufacturer's unopened packaging until ready for installation.

B. Store and dispose of solvent-based materials, and materials used with solvent-based materials, in accordance with requirements of local authorities having jurisdiction.

1.07 FIELD CONDITIONS

A. Maintain environmental conditions (temperature, humidity, and ventilation) within limits recommended by manufacturer for optimum results. Do not install products under environmental conditions outside manufacturer's absolute limits.

PART 2 PRODUCTS

2.01 COUNTERTOPS

A. Solid Surfacing Countertops: Solid surfacing sheet or plastic resin casting over continuous substrate.
   1. Flat Sheet Thickness: 1/2 inch, minimum.
   2. Solid Surfacing Sheet and Plastic Resin Castings: Complying with ISFA 2-01 and NEMA LD 3; acrylic or polyester resin, mineral filler, and pigments; homogenous, non-porous and capable of being worked and repaired using standard woodworking tools; no surface coating; color and pattern consistent throughout thickness.
      a. Manufacturers:
         1) Avonite Surfaces: www.avonitesurfaces.com.
         2) Dupont: www.corian.com.
         3) Formica Corporation: www.formica.com.
         4) Wilsonart: www.wilsonart.com.
      b. Finish on Exposed Surfaces: Matte, gloss rating of 5 to 20.

c. Color and Pattern: As selected by Architect from manufacturer's full line.

3. Other Components Thickness: 1/2 inch, minimum.
4. Exposed Edge Treatment: Built up to minimum 1-1/4 inch thick; square edge; use marine edge at sinks.
5. Back and End Splashes: Same sheet material, square top; minimum 4 inches high.
6. Fabricate in accordance with manufacturer's standard requirements.

2.02 FABRICATION

A. Fabricate tops and splashes in the largest sections practicable, with top surface of joints flush.

B. Wall-Mounted Counters: Provide skirts, aprons, brackets, and braces as indicated on drawings, finished to match.

PART 3 EXECUTION

3.01 EXAMINATION

A. Do not begin installation until substrates have been properly prepared.

B. If substrate preparation is the responsibility of another installer, notify Architect of unsatisfactory preparation before proceeding.

C. Verify that wall surfaces have been finished and mechanical and electrical services and outlets are installed in proper locations.

3.02 INSTALLATION

A. Securely attach countertops to cabinets using concealed fasteners. Make flat surfaces level; shim where required.

B. Seal joint between back/end splashes and vertical surfaces.

3.03 CLEANING

A. Clean countertops surfaces thoroughly.

3.04 PROTECTION

A. Protect installed products until completion of project.

B. Touch-up, repair or replace damaged products before Date of Substantial Completion.

END OF SECTION

SECTION 22 07 19
PLUMBING PIPING INSULATION

PART 1 GENERAL

1.01 SECTION INCLUDES

A. Piping insulation.

B. Jackets and accessories.

PART 2 PRODUCTS

2.01 REGULATORY REQUIREMENTS

A. Surface Burning Characteristics: Flame spread index/Smoke developed index of 25/50, maximum, when tested in accordance with ASTM E84 or UL 723.

2.02 GLASS FIBER

A. Insulation: ASTM C547 and ASTM C795; rigid molded, noncombustible.
   1. 'K' Value: ASTM C177, 0.24 at 75 degrees F.
   2. Maximum Service Temperature: 850 degrees F.
   3. Maximum Moisture Absorption: 0.2 percent by volume.

B. Insulation: ASTM C547 and ASTM C795; rigid molded, noncombustible, with wicking material to transport condensed water to the outside of the system for evaporation to the atmosphere.
   1. 'K' Value: ASTM C177, 0.23 at 75 degrees F.
   2. Maximum Service Temperature: 220 degrees F.
   3. Maximum Moisture Absorption: 0.2 percent by volume.

C. Vapor Barrier Jacket: White Kraft paper with glass fiber yarn, bonded to aluminized film; moisture vapor transmission when tested in accordance with ASTM E96/E96M of 0.02 perm-inches.

2.03 CELLULAR GLASS

A. Insulation: ASTM C552, Type II.
   1. Apparent Thermal Conductivity; 'K' Value: Grade 6, 0.35 at 100 degrees F.
   2. Service Temperature: Up to 800 degrees F.
   3. Water Vapor Permeability: 0.005 perm inch.
   4. Water Absorption: 0.5 percent by volume, maximum.

2.04 JACKETS

A. PVC Plastic.
   1. Jacket: One piece molded type fitting covers and sheet material, off-white color.
      a. Minimum Service Temperature: 0 degrees F.
      b. Maximum Service Temperature: 150 degrees F.
      c. Moisture Vapor Permeability: 0.002 perm inch, maximum, when tested in accordance with ASTM E96/E96M.
      d. Thickness: 10 mil.
      e. Connections: Brush on welding adhesive.

B. ABS Plastic:
   1. Jacket: One piece molded type fitting covers and sheet material, off-white color.
      a. Minimum Service Temperature: Minus 40 degrees F.
      b. Maximum Service Temperature: 180 degrees F.
      c. Moisture Vapor Permeability: 0.012 perm inch, when tested in accordance with ASTM E96/E96M.
      d. Thickness: 30 mil.
      e. Connections: Brush on welding adhesive.

C. Aluminum Jacket: ASTM B209 (ASTM B209M) formed aluminum sheet.
   1. Thickness: 0.016 inch sheet.
   2. Finish: Smooth.

3. Joining: Longitudinal slip joints and 2 inch laps.
4. Fittings: 0.016 inch thick die shaped fitting covers with factory attached protective liner.
5. Metal Jacket Bands: 3/8 inch wide; 0.015 inch thick aluminum.

PART 3 EXECUTION

3.01 INSTALLATION

A. Install in accordance with manufacturer's instructions.

B. Exposed Piping: Locate insulation and cover seams in least visible locations.

C. Insulated pipes conveying fluids below ambient temperature: Insulate entire system including fittings, valves, unions, flanges, strainers, flexible connections, pump bodies, and expansion joints.

D. Glass fiber insulated pipes conveying fluids below ambient temperature:
   1. Provide vapor barrier jackets, factory-applied or field-applied. Secure with self-sealing longitudinal laps and butt strips with pressure sensitive adhesive. Secure with outward clinch expanding staples and vapor barrier mastic.
   2. Insulate fittings, joints, and valves with molded insulation of like material and thickness as adjacent pipe. Finish with glass cloth and vapor barrier adhesive or PVC fitting covers.

E. Glass fiber insulated pipes conveying fluids above ambient temperature:
   1. Provide standard jackets, with or without vapor barrier, factory-applied or field-applied. Secure with self-sealing longitudinal laps and butt strips with pressure sensitive adhesive. Secure with outward clinch expanding staples.
   2. Insulate fittings, joints, and valves with insulation of like material and thickness as adjoining pipe. Finish with glass cloth and adhesive or PVC fitting covers.

3.02 SCHEDULES

A. Plumbing Systems:
   1. Domestic Hot Water Supply:
      a. Glass Fiber Insulation
      b. Cellular Glass Insulation
   2. Domestic Hot Water Recirculation
      a. Glass Fiber Insulation
   3. Roof Drain Bodies: a. Glass Fiber Insulation
   4. Roof Drainage Above Grade a. Glass Fiber Insulation

B. Cooling Systems:
   1. Condensate Drains from Cooling Coils: a. Glass Fiber Insulatiion

END OF SECTION

SECTION 22 10 05
PLUMBING PIPING

PART 1 GENERAL

1.01 SECTION INCLUDES

A. Pipe, pipe fittings, specialties, and connections for piping systems.
   1. Sanitary sewer.
   2. Domestic water.
   3. Storm water.
   4. Flanges, unions, and couplings.
   5. Pipe hangers and supports.
   6. Valves.

1.02 SUBMITTALS

A. See Section 01 30 00 - Administrative Requirements, for submittal procedures.

B. Product Data: Provide data on pipe materials, pipe fittings, valves, and accessories. Provide manufacturers catalog information. Indicate valve data and ratings.

C. Welder Certificate: Include welders certification of compliance with ASME BPVC-IX.

D. Project Record Documents: Record actual locations of valves.

1.03 QUALITY ASSURANCE

A. Perform work in accordance with applicable codes.

B. Valves: Manufacturer's name and pressure rating marked on valve body.

1.04 DELIVERY, STORAGE, AND HANDLING

A. Accept valves on site in shipping containers with labeling in place. Inspect for damage.

B. Provide temporary protective coating on cast iron and steel valves.

C. Provide temporary end caps and closures on piping and fittings. Maintain in place until installation.

D. Protect piping systems from entry of foreign materials by temporary covers, completing sections of the work, and isolating parts of completed system.

PART 2 PRODUCTS

2.01 GENERAL REQUIREMENTS

A. Potable Water Supply Systems: Provide piping, pipe fittings, and solder and flux (if used), that comply with NSF 61 and NSF 372 for maximum lead content; label pipe and fittings.

2.02 SANITARY SEWER PIPING, ABOVE GRADE

A. Cast Iron Pipe: ASTM A74, service weight.
   1. Fittings: Cast iron.
   2. Joint Seals: ASTM C564 neoprene gaskets, or lead and oakum.

2.03 DOMESTIC WATER PIPING, ABOVE GRADE

A. Copper Tube: ASTM B88 (ASTM B88M), Type K (A), Drawn (H).
   1. Fittings: ASME B16.18, cast copper alloy or ASME B16.22, wrought copper and bronze.
   2. Joints: ASTM B32, alloy Sn95 solder.

2.04 STORM WATER PIPING, ABOVE GRADE

A. Cast Iron Pipe: CISPI 301, hubless, service weight.
   1. Fittings: Cast iron.
   2. Joints: Neoprene gaskets and stainless steel clamp-and-shield assemblies.

2.05 NATURAL GAS PIPING, ABOVE GRADE

A. Steel Pipe: ASTM A53/A53M Schedule 40 black.

1. Fittings: ASME B16.3, malleable iron, or ASTM A234/A234M, wrought steel welding type.
2. Joints: Threaded or welded to ASME B31.1.

2.06 FLANGES, UNIONS, AND COUPLINGS

A. Unions for Pipe Sizes 3 Inches and Under:
   1. Copper tube and pipe: Class 150 bronze unions with soldered joints.

B. Flanges for Pipe Size Over 1 Inch:
   1. Copper Tube and Pipe: Class 150 slip-on bronze flanges; preformed neoprene gaskets.

2.07 PIPE HANGERS AND SUPPORTS

A. Provide hangers and supports that comply with MSS SP-58.
   1. If type of hanger or support for a particular situation is not indicated, select appropriate type using MSS SP-58 recommendations.
   2. Overhead Supports: Individual steel rod hangers attached to structure or to trapeze hangers.
   3. Trapeze Hangers: Welded steel channel frames attached to structure.
   4. Vertical Pipe Support: Steel riser clamp.

B. Plumbing Piping - Drain, Waste, and Vent:
   1. Hangers for Pipe Sizes 1/2 Inch to 1-1/2 Inches: Malleable iron, adjustable swivel, split ring.
   2. Hangers for Pipe Sizes 2 Inches and Over: Carbon steel, adjustable, clevis.

C. Plumbing Piping - Water:
   1. Hangers for Pipe Sizes 1/2 Inch to 1-1/2 Inches: Malleable iron, adjustable swivel, split ring.
   2. Hangers for Cold Pipe Sizes 2 Inches and Over: Carbon steel, adjustable, clevis.

D. Hanger Fasteners: Attach hangers to structure using appropriate fasteners, as follows:
   1. Concrete Wedge Expansion Anchors: Complying with ICC-ES AC193.
   2. Masonry Wedge Expansion Anchors: Complying with ICC-ES AC01.
   3. Concrete Screw Type Anchors: Complying with ICC-ES AC193.
   4. Concrete Adhesive Type Anchors: Complying with ICC-ES AC308.
   5. Other Types: As required.

2.08 BALL VALVES

A. Construction, 4 Inches and Smaller: MSS SP-110, Class 150, 400 psi CWP, bronze or ductile iron body, 304 stainless steel ball, regular port, teflon seats and stuffing box ring, blow-out proof stem, lever handle with balancing stops, threaded or grooved ends with union.

PART 3 EXECUTION

3.01 EXAMINATION

A. Verify that excavations are to required grade, dry, and not over-excavated.

3.02 PREPARATION

A. Ream pipe and tube ends. Remove burrs. Bevel plain end ferrous pipe.

B. Remove scale and dirt, on inside and outside, before assembly.

C. Prepare piping connections to equipment with flanges or unions.

3.03 INSTALLATION

A. Install in accordance with manufacturer's instructions.

B. Route piping in orderly manner and maintain gradient. Route parallel and perpendicular to walls.

C. Install piping to maintain headroom, conserve space, and not interfere with use of space.

D. Group piping whenever practical at common elevations.

E. Provide clearance in hangers and from structure and other equipment for installation of insulation and access to valves and fittings.

F. Provide access where valves and fittings are not exposed.

G. Prepare exposed, unfinished pipe, fittings, supports, and accessories ready for finish painting.

H. Copper Pipe and Tube: Make soldered joints in accordance with ASTM B828, using specified solder, and flux meeting ASTM B813; in potable water systems use flux also complying with NSF 61 and NSF 372.

3.04 DISINFECTION OF DOMESTIC WATER PIPING SYSTEM

A. Disinfect water distribution system in accordance with Section 33 01 10.58.

3.05 SCHEDULES

A. Pipe Hanger Spacing:
   1. Metal Piping:
      a. Pipe Size: 1/2 inches to 1-1/4 inches:
         1) Maximum Hanger Spacing: 6.5 ft.
         2) Hanger Rod Diameter: 3/8 inches.
      b. Pipe Size: 1-1/2 inches to 2 inches:
         1) Maximum Hanger Spacing: 10 ft.
         2) Hanger Rod Diameter: 3/8 inch.

END OF SECTION

SECTION 22 10 06
PLUMBING PIPING SPECIALTIES

PART 1 GENERAL

1.01 SECTION INCLUDES

A. Drains.

B. Cleanouts.

C. Water hammer arrestors.

D. Mixing valves.

1.02 SUBMITTALS

A. See Section 01 30 00 - Administrative Requirements, for submittal procedures.

B. Product Data: Provide component sizes, rough-in requirements, service sizes, and finishes.

C. Shop Drawings: Indicate dimensions, weights, and placement of openings and holes.

1.03 QUALITY ASSURANCE

A. Manufacturer Qualifications: Company specializing in manufacturing the Products specified in this section with not less than three years documented experience.

1.04 DELIVERY, STORAGE, AND HANDLING

A. Accept specialties on site in original factory packaging. Inspect for damage.

PART 2 PRODUCTS

2.01 GENERAL REQUIREMENTS

A. Specialties in Potable Water Supply Systems: Provide products that comply with NSF 61 and NSF 372 for maximum lead content.

B. See plumbing fixture schedule on plans.

2.02 WATER HAMMER ARRESTORS

A. Water Hammer Arrestors:

2.03 MIXING VALVES

A. Thermostatic Mixing Valves:

1. Valve: Chrome plated cast brass body, stainless steel or copper alloy bellows, integral temperature adjustment.

PART 3 EXECUTION

3.01 INSTALLATION

A. Install in accordance with manufacturer's instructions.

B. Install floor cleanouts at elevation to accommodate finished floor.

C. Install water hammer arrestors complete with accessible isolation valve on hot and cold water supply piping to lavatory sinks, washing machine outlets, or _____.

D. Install air chambers on hot and cold water supply piping to each fixture or group of fixtures (each washroom). Fabricate same size as supply pipe or 3/4 inch minimum, and minimum 18 inches long.

END OF SECTION

SECTION 22 30 00
PLUMBING EQUIPMENT

PART 1 GENERAL

1.01 SECTION INCLUDES

A. Water Heaters:
   1. Commercial gas fired.

B. Diaphragm-type compression tanks.

C. In-line circulator pumps.

1.02 SUBMITTALS

A. See Section 01 30 00 - Administrative Requirements, for submittals procedures.

B. Product Data:
   1. Provide dimension drawings of water heaters indicating components and connections to other equipment and piping.
   2. Indicate pump type, capacity, power requirements.
   3. Provide certified pump curves showing pump performance characteristics with pump and system operating point plotted. Include NPSH curve when applicable.
   4. Provide electrical characteristics and connection requirements.

C. Warranty Documentation: Submit manufacturer warranty and ensure that forms have been completed in Owner's name and registered with manufacturer.

1.03 QUALITY ASSURANCE

A. Manufacturer Qualifications: Company specializing in manufacturing the type of products specified in this section, with minimum three years of documented experience.

B. Certifications:
   1. Water Heaters: NSF approved.
   2. Gas Water Heaters: Certified by CSA International to ANSI Z21.10.1, as applicable, in addition to requirements specified elsewhere.

C. Identification: Provide pumps with manufacturer's name, model number, and rating/capacity identified by permanently attached label.

1.04 WARRANTY

A. See Section 01 78 00 - Closeout Submittals, for additional warranty requirements.

B. Provide five year manufacturer warranty for domestic water heaters.

PART 2 PRODUCTS

2.01 WATER HEATERS

A. Commercial Gas Fired:
   1. Type: Automatic, natural gas-fired, vertical storage.
   2. Performance: Refer to plumbing equipment schedule on plans.
   3. Tank: Glass lined welded steel ASME labeled; multiple flue passages, 4 inch diameter inspection port, thermally insulated with minimum 2 inches glass fiber, encased in corrosion-resistant steel jacket; baked-on enamel finish; floor shield and legs.
   4. Accessories:
      a. Water Connections: Brass.
      b. Dip Tube: Brass.
      c. Drain valve.
      d. Anode: Magnesium.
      e. Temperature and Pressure Relief Valve: ASME labeled.
   5. Certified For The Following Applications:
      a. Automatic storage water heater.
      b. For operation in high altitude installations.

2.02 DIAPHRAGM-TYPE COMPRESSION TANKS

A. Construction: Welded steel, tested and stamped in accordance with ASME BPVC-VIII-1; supplied with National Board Form U-1, rated for working pressure of 125 psig, with flexible EPDM diaphragm sealed into tank, and steel legs or saddles.

B. Accessories: Pressure gauge and air-charging fitting, tank drain; precharge to 12 psig.

2.03 IN-LINE CIRCULATOR PUMPS

A. Casing: Bronze, rated for 125 psig working pressure, with stainless steel rotor assembly.

B. Impeller: Bronze.

C. Shaft: Alloy steel with integral thrust collar and two oil lubricated bronze sleeve bearings.

D. Seal: Carbon rotating against a stationary ceramic seat.

E. Drive: Flexible coupling.

PART 3 EXECUTION

3.01 INSTALLATION

A. Install plumbing equipment in accordance with manufacturer's instructions, as required by code, and complying with conditions of certification, if any.

B. Coordinate with plumbing piping and related fuel piping work to achieve operating system.

C. Domestic Water Storage Tanks:
   1. Provide steel pipe support, independent of building structural framing members.
   2. Clean and flush prior to delivery to site. Seal until pipe connections are made.

D. Pumps:
   1. Ensure pumps operate at specified system fluid temperatures without vapor binding and cavitation, are non-overloading in parallel or individual operation, and operate within 25 percent of midpoint of published maximum efficiency curve.

END OF SECTION

SECTION 22 40 00
PLUMBING FIXTURES

PART 1 GENERAL

1.01 SECTION INCLUDES

A. Water closets.

B. Urinals.

C. Lavatories.

D. Service sinks.

E. Electric water coolers.

1.02 SUBMITTALS

A. See Section 01 30 00 - Administrative Requirements, for submittal procedures.

B. Product Data: Provide catalog illustrations of fixtures, sizes, rough-in dimensions, utility sizes, trim, and finishes.

C. Manufacturer's Instructions: Indicate installation methods and procedures.

D. Warranty: Submit manufacturer warranty and ensure forms have been completed in Owner's name and registered with manufacturer.

1.03 QUALITY ASSURANCE

A. Manufacturer Qualifications: Company specializing in manufacturing the type of products specified in this section, with minimum three years of documented experience.

1.04 WARRANTY

A. See Section 01 78 00 - Closeout Submittals, for additional warranty requirements.

B. Provide five year manufacturer warranty for electric water cooler.

PART 2 PRODUCTS

2.01 GENERAL

A. Potable Water Systems: Provide plumbing fittings and faucets that comply with NSF 61 and NSF 372 for maximum lead content; label pipe and fittings.

B. Refer to plumbing fixture schedule on plans.

PART 3 EXECUTION

3.01 EXAMINATION

A. Verify that walls and floor finishes are prepared and ready for installation of fixtures.

B. Verify that electric power is available and of the correct characteristics.

C. Confirm that millwork is constructed with adequate provision for the installation of counter top lavatories and sinks.

3.02 PREPARATION

A. Rough-in fixture piping connections in accordance with minimum sizes indicated in fixture rough-in schedule for particular fixtures.

3.03 INSTALLATION

A. Install each fixture with trap, easily removable for servicing and cleaning.

B. Provide chrome plated rigid or flexible supplies to fixtures with loose key stops, reducers, and escutcheons.

C. Install components level and plumb.

D. Solidly attach water closets to floor with lag screws. Lead flashing is not intended hold fixture in place.

3.04 CLEANING

A. Clean plumbing fixtures and equipment.

END OF SECTION

SECTION 23 05 53
IDENTIFICATION FOR HVAC PIPING AND EQUIPMENT

PART 1 GENERAL

1.01 SECTION INCLUDES

A. Nameplates.

B. Adhesive-backed duct markers.

C. Pipe markers.

D. Ceiling tacks.

PART 2 PRODUCTS

2.01 IDENTIFICATION APPLICATIONS

A. Dampers: Ceiling tacks, where located above lay-in ceiling.

B. Ductwork: Nameplates.

C. Heat Transfer Equipment: Nameplates.

D. Piping: Tags.

E. Thermostats: Nameplates.

F. Valves: Tags and ceiling tacks where located above lay-in ceiling.

2.02 NAMEPLATES

A. Letter Color: White.

B. Letter Height: 1/4 inch.

C. Background Color: Black.

D. Plastic: Conform to ASTM D709.

2.03 ADHESIVE-BACKED DUCT MARKERS

A. Material: High gloss acrylic adhesive-backed vinyl film 0.0032 inch; printed with UV and chemical resistant inks.

B. Style: Individual Label.

C. Color: Yellow/Black.

2.04 PIPE MARKERS

A. Color: Conform to ASME A13.1.

2.05 CEILING TACKS

A. Description: Steel with 3/4 inch diameter color coded head.

B. Color code as follows:
   1. HVAC Equipment: Yellow.
   2. Heating/Cooling Valves: Blue.

PART 3 EXECUTION

3.01 PREPARATION

A. Degrease and clean surfaces to receive adhesive for identification materials.

3.02 INSTALLATION

A. Install nameplates with corrosive-resistant mechanical fasteners, or adhesive. Apply with sufficient adhesive to ensure permanent adhesion and seal with clear lacquer.

B. Locate ceiling tacks to locate valves or dampers above lay-in panel ceilings. Locate in corner of panel closest to equipment.

END OF SECTION

SECTION 23 05 93

TESTING, ADJUSTING, AND BALANCING FOR HVAC

PART 1 GENERAL

1.01 SECTION INCLUDES

A. Testing, adjustment, and balancing of air systems.

1.02 SUBMITTALS

A. Installer Qualifications: Submit name of adjusting and balancing agency and TAB supervisor for approval within 30 days after award of Contract.

B. Final Report: Indicate deficiencies in systems that would prevent proper testing, adjusting, and balancing of systems and equipment to achieve specified performance.
   1. Revise TAB plan to reflect actual procedures and submit as part of final report.
   2. Submit draft copies of report for review prior to final acceptance of Project. Provide final copies for Architect and for inclusion in operating and maintenance manuals.
   3. Include actual instrument list, with manufacturer name, serial number, and date of calibration.
   4. Form of Test Reports: Where the TAB standard being followed recommends a report format use that; otherwise, follow ASHRAE Std 111.
   5. Units of Measure: Report data in I-P (inch-pound) units only.

PART 2 PRODUCTS - NOT USED

PART 3 EXECUTION

3.01 GENERAL REQUIREMENTS

A. Perform total system balance in accordance with one of the following:
   1. AABC (NSTSB), AABC National Standards for Total System Balance.
   2. ASHRAE Std 111, Practices for Measurement, Testing, Adjusting and Balancing of Building Heating, Ventilation, Air-Conditioning, and Refrigeration Systems.
   3. SMACNA (TAB).

B. Begin work after completion of systems to be tested, adjusted, or balanced and complete work prior to Substantial Completion of the project.

C. TAB Agency Qualifications:
   1. Company specializing in the testing, adjusting, and balancing of systems specified in this section.

3.02 EXAMINATION

A. Verify that systems are complete and operable before commencing work. Ensure the following conditions:

B. Submit field reports. Report defects and deficiencies that will or could prevent proper system balance.

C. Beginning of work means acceptance of existing conditions.

3.03 MINIMUM DATA TO BE REPORTED

A. Air Cooled Condensers:
   1. Identification/number.
   2. Location.
   3. Manufacturer.
   4. Model number.
   5. Serial number.
   6. Entering DB air temperature, design and actual.
   7. Leaving DB air temperature, design and actual.
   8. Number of compressors.

B. Air Moving Equipment:

1. Location.
2. Manufacturer.
3. Model number.
4. Serial number.
5. Air flow, specified and actual.
6. Return air flow, specified and actual.
7. Outside air flow, specified and actual.
8. Total static pressure (total external), specified and actual.
9. Fan RPM.

END OF SECTION

SECTION 23 23 00
REFRIGERANT PIPING

PART 1 GENERAL

1.01 SECTION INCLUDES

A. Piping.

B. Refrigerant.

C. Moisture and liquid indicators.

D. Valves.

E. Strainers.

F. Filter-driers.

1.02 SUBMITTALS

A. Product Data: Provide general assembly of specialties, including manufacturers catalogue information. Provide manufacturers catalog data including load capacity.

1.03 DELIVERY, STORAGE, AND HANDLING

A. Deliver and store piping and specialties in shipping containers with labeling in place.

B. Protect piping and specialties from entry of contaminating material by leaving end caps and plugs in place until installation.

C. Dehydrate and charge components such as piping and receivers, seal prior to shipment, until connected into system.

PART 2 PRODUCTS

2.01 PIPING

A. Copper Tube: ASTM B280, H58 hard drawn or O60 soft annealed.
   1. Fittings: ASME B16.22 wrought copper.
   2. Joints: Braze, AWS A5.8M/A5.8 BCuP silver/phosphorus/copper alloy.

2.02 MOISTURE AND LIQUID INDICATORS

A. Indicators: Single port type, UL listed, with copper or brass body, flared or solder ends, sight glass, color coded paper moisture indicator with removable element cartridge and plastic cap; for maximum temperature of 200 degrees F and maximum working pressure of 500 psi.

2.03 VALVES

A. Packed Angle Valves:
   1. Forged brass or nickel plated forged steel, forged brass seal caps with copper gasket, rising stem and seat with backseating, molded stem packing, solder or flared ends; for maximum working pressure of 500 psi and maximum temperature of 275 degrees F.

B. Ball Valves:
   1. Two piece bolted forged brass body with teflon ball seals and copper tube extensions, brass bonnet and seal cap, chrome plated ball, stem with neoprene ring stem seals; for maximum working pressure of 500 psi and maximum temperature of 300 degrees F.

C. Service Valves:
   1. Forged brass body with copper stubs, brass caps, removable valve core, integral ball check valve, flared or solder ends, for maximum pressure of 500 psi.

2.04 STRAINERS

A. Straight Line or Angle Line Type:
   1. Brass or steel shell, steel cap and flange, and replaceable cartridge, with screen of stainless steel wire or monel reinforced with brass; for maximum working pressure of 430 psi.

2.05 FILTER-DRIERS

A. Performance:
   1. Flow Capacity - Liquid Line: ____ ton, minimum, rated in accordance with AHRI 710.
   2. Pressure Drop: 2 psi, maximum, when operating at full connected evaporator capacity.
   3. Design Working Pressure: 350 psi, minimum.

B. Cores: Molded or loose-fill molecular sieve desiccant compatible with refrigerant, activated alumina, activated charcoal, and filtration to 40 microns, with secondary filtration to 20 microns; of construction that will not pass into refrigerant lines.

C. Construction: UL listed.
   1. Connections: As specified for applicable pipe type.

PART 3 EXECUTION

3.01 INSTALLATION

A. Install refrigeration specialties in accordance with manufacturer's instructions.

B. Route piping in orderly manner, with plumbing parallel to building structure, and maintain gradient.

C. Install piping to conserve building space and avoid interference with use of space.

D. Install piping to allow for expansion and contraction without stressing pipe, joints, or connected equipment.

END OF SECTION

SECTION 23 31 00
HVAC DUCTS AND CASINGS

PART 1 GENERAL

1.01 SECTION INCLUDES

A. Metal ductwork.

1.02 SUBMITTALS

A. See Section 01 30 00 - Administrative Requirements, for submittal procedures.

B. Product Data: Provide data for duct materials.

PART 2 PRODUCTS

2.01 DUCT ASSEMBLIES

A. Regulatory Requirements: Construct ductwork to NFPA 90A standards.

B. Ducts: Galvanized steel, unless otherwise indicated.

2.02 MATERIALS

A. Galvanized Steel for Ducts: Hot-dipped galvanized steel sheet, ASTM A653/A653M FS Type B, with G60/Z180 coating.

2.03 DUCTWORK FABRICATION

A. Fabricate and support in accordance with SMACNA (DCS) and as indicated.

B. Provide duct material, gages, reinforcing, and sealing for operating pressures indicated.

C. Increase duct sizes gradually, not exceeding 15 degrees divergence wherever possible; maximum 30 degrees divergence upstream of equipment and 45 degrees convergence downstream.

D. Fabricate continuously welded round and oval duct fittings in accordance with SMACNA (DCS).

PART 3 EXECUTION

3.01 INSTALLATION

A. Install, support, and seal ducts in accordance with SMACNA (DCS).

B. Duct sizes indicated are inside clear dimensions. For lined ducts, maintain sizes inside lining.

C. Locate ducts with sufficient space around equipment to allow normal operating and maintenance activities.

END OF SECTION

SECTION 23 34 23
HVAC POWER VENTILATORS

PART 1 GENERAL

1.01 SECTION INCLUDES

A. Cabinet exhaust fans.

1.02 SUBMITTALS

A. Product Data: Provide data on fans and accessories including fan curves with specified operating point clearly plotted, power, RPM, sound power levels at rated capacity, and electrical characteristics and connection requirements.

PART 2 PRODUCTS

2.01 POWER VENTILATORS - GENERAL

A. Static and Dynamically Balanced: AMCA 204 - Balance Quality and Vibration Levels for Fans.

B. Performance Ratings: Determined in accordance with AMCA 210 and bearing the AMCA Certified Rating Seal.

C. Sound Ratings: AMCA 301, tested to AMCA 300 and bearing AMCA Certified Sound Rating Seal.

D. Fabrication: Conform to AMCA 99.

E. Electrical Components: Listed and classified by Underwriters Laboratories Inc. as suitable for the purpose specified and indicated.

2.02 CABINET EXHAUST FANS

A. Centrifugal Fan Unit: V-belt or direct driven with galvanized steel housing lined with acoustic insulation, resilient mounted motor, gravity backdraft damper in discharge.

B. Grille: Molded white plastic.

C. Sheaves: Cast iron or steel, dynamically balanced, bored to fit shafts and keyed; variable and adjustable pitch motor sheaves selected so required rpm is obtained with sheaves set at mid-position; fan shaft with self-aligning pre-lubricated ball bearings.

PART 3 EXECUTION

3.01 INSTALLATION

A. Install in accordance with manufacturer's instructions.

B. Provide backdraft dampers on outlet from cabinet and ceiling exhauster fans and as indicated.

END OF SECTION

SECTION 23 37 00
AIR OUTLETS AND INLETS

PART 1 GENERAL

1.01 SUBMITTALS

A. Product Data: Provide data for equipment required for this project. Review outlets and inlets as to size, finish, and type of mounting prior to submission. Submit schedule of outlets and inlets showing type, size, location, application, and noise level.

PART 2 PRODUCTS

2.01 GENERAL

A. See mechanical equipment schedules.

2.02 GOOSENECKS

A. Fabricate in accordance with SMACNA (DCS) of minimum 18 gage, 0.0598 inch galvanized steel.

PART 3 EXECUTION

3.01 INSTALLATION

A. Install in accordance with manufacturer's instructions.

B. Check location of outlets and inlets and make necessary adjustments in position to conform with architectural features, symmetry, and lighting arrangement.

C. Provide balancing dampers on duct take-off to diffusers, and grilles and registers, despite whether dampers are specified as part of the diffuser, or grille and register assembly.

D. Paint ductwork visible behind air outlets and inlets matte black. Refer to Section 09 91 23.

END OF SECTION

SECTION 23 81 29
VARIABLE REFRIGERANT FLOW HVAC SYSTEMS

PART 1 GENERAL

1.01 SECTION INCLUDES

A. Variable refrigerant volume HVAC system includes:
   1. Outdoor/condensing unit(s).
   2. Indoor/evaporator units.
   3. Branch selector units.
   4. Refrigerant piping.
   5. Control panels.
   6. Control wiring.

1.02 SUBMITTALS

A. Product Data: Submit manufacturer's standard data sheets showing the following for each item of equipment, marked to correlate to equipment item markings indicated in the Contract Documents.

B. Operating and Maintenance Data:
   1. Manufacturer's complete standard instructions for each unit of equipment and control panel.
   2. Custom-prepared system operation, troubleshooting, and maintenance instructions and recommendations.
   3. Identification of replaceable parts and local source of supply.

C. Warranty: Executed warranty, made out in Owner's name.

1.03 DELIVERY, STORAGE AND HANDLING

A. Deliver, store, and handle equipment and refrigerant piping according to manufacturer's recommendations.

1.04 WARRANTY

A. Compressors: Provide manufacturer's warranty for six (6) years from date of installation. During the stated period, should any part fail due to defects in material and workmanship, it shall be repaired or replaced at the discretion of Daikin AC (Americas), Inc. according to Daikin's terms and conditions. All warranty service work shall be preformed by a Daikin factory trained service professional.

PART 2 PRODUCTS

2.01 HVAC SYSTEM DESIGN

A. System Operation: Heating and cooling, simultaneously.
   1. Zoning: Provide capability for temperature control for each individual indoor/evaporator unit independently of all other units.
   2. Zoning: Provide heating/cooling selection for each individual indoor/evaporator unit independently of all other units.
   3. Provide a complete functional system that achieves the specified performance based on the specified design conditions and that is designed and constructed according to the equipment manufacturer's requirements.
   4. Conditioned spaces are indicated on drawings.
   5. Branch selector unit locations are not indicated on drawings.
   6. Required equipment unit capacities are indicated on drawings.
   7. Refrigerant piping sizes are not indicated on drawings.
   8. Connect equipment to condensate piping provided by others; condensate piping is indicated on drawings.

B. Refrigerant Piping Lengths: Provide equipment capable of serving system with following piping lengths without any oil traps and to comply with manufacturer requirements.

C. Control Wiring Lengths:

D. Controls: Provide the following control interfaces:
   1. For Each Indoor/Evaporator Unit: One wall-mounted wired "local" controller, with temperature sensor; locate where indicated.

E. Local Controllers: Wall-mounted, wired, containing temperature sensor.

2.02 EQUIPMENT

A. All Units: Factory assembled, wired, and piped and factory tested for function and safety.
   1. Refrigerant: R-410A.
   2. Performance Certification: AHRI Certified; www.ahrinet.org.
   3. Safety Certification: Tested to UL 1995 by UL or Intertek-ETL, listed in ITS (DIR), and bearing the certification label.
   4. Provide outdoor/condensing units capable of serving indoor unit capacity up to 200 percent of the capacity of the outdoor/condensing unit.
   5. Provide units capable of serving the zones indicated.
   6. Energy Efficiency: Report EER and COP based on tests conducted at “full load” in accordance with AHRI 210/240 or alternate test method approved by U.S. Department of Energy.

B. Refrigerant Piping:
   1. Insulate each refrigerant line individually between the condensing and indoor units.

2.03 OUTDOOR/CONDENSING UNITS

A. Outdoor/Condensing Units: Air-cooled DX refrigeration units, designed specifically for use with indoor/evaporator units; factory assembled and wired with all necessary electronic and refrigerant controls; modular design for ganging multiple units.
   1. Refrigeration Circuit: Scroll compressors, motors, fans, condenser coil, electronic expansion valves, solenoid valves, 4-way valve, distribution headers, capillaries, filters, shut off valves, oil separators, service ports and refrigerant regulator.
   2. Refrigerant: Factory charged.
   3. Variable Volume Control: Modulate compressor capacity automatically to maintain constant suction and condensing pressures while varying refrigerant volume to suit heating/cooling loads.
   4. Capable of being installed with wiring and piping to the left, right, rear or bottom.
   5. Capable of heating operation at low end of operating range as specified, without additional low ambient controls or auxiliary heat source; during heating operation, reverse cycle (cooling mode) oil return or defrost is not permitted, due to potential reduction in space temperature.
   6. Sound Pressure Level: As specified, measured at 3 feet from front of unit; provide night setback sound control as a standard feature; three selectable sound level steps of 55 dB, 50 dB, and 45 dB, maximum.
   7. Power Failure Mode: Automatically restart operation after power failure without loss of programmed settings.
   8. Safety Devices: High pressure sensor and switch, low pressure sensor/switch, control circuit fuses, crankcase heaters, fusible plug, overload relay, inverter overload protector, thermal protectors for compressor and fan motors, over current protection for the inverter and anti-recycling timers.
   9. Provide refrigerant sub-cooling to ensure the liquid refrigerant does not flash when supplying to us indoor units.
   10. Oil Recovery Cycle: Automatic, occurring 2 hours after start of operation and then every 8 hours of operation; maintain continuous heating during oil return operation.
   11. Controls: Provide contacts for electrical demand shedding.

B. Unit Cabinet: Weatherproof and corrosion resistant; rust-proofed mild steel panels coated with baked enamel finish.
   1. Designed to allow side-by-side installation with minimum spacing.

C. Fans: One or more direct-drive propeller type, vertical discharge, with multiple speed operation via DC (digitally commutating) inverter.
   1. Provide minimum of 2 fans for each condensing unit.
   2. External Static Pressure: Factory set at 0.12 in WG, minimum.
   3. Indoor Mounted Air-Cooled Units: External static pressure field set at 0.32 in WG, minimum; provide for mounting of field-installed ducts.
   4. Fan Airflow: As indicated for specific equipment.
   5. Fan Motors: Factory installed; permanently lubricated bearings; inherent protection; fan guard; output as indicated for specific equipment.

D. Condenser Coils: Copper tubes expanded into aluminum fins to form mechanical bond; waffle louver fin and rifled bore tube design to ensure high efficiency performance.

E. Compressors: Scroll type, hermetically sealed, variable speed inverter-driven and fixed speed in combination to suit total capacity; minimum of one variable speed, inverter driven compressor per condenser unit; minimum of two compressors per condenser unit; capable of controlling capacity within range of 6 percent to 100 percent of total capacity.
   1. Multiple Condenser Modules: Balance total operation hours of compressors by means of duty cycling function, providing for sequential starting of each module at each start/stop cycle, completion of oil return, and completion of defrost, or every 8 hours.
   2. Failure Mode: In the event of compressor failure, operate remaining compressor(s) at proportionally reduced capacity; provide microprocessor and associated controls specifically designed to address this condition.
   3. Provide each compressor with crankcase heater, high pressure safety switch, and internal thermal overload protector.
   4. Provide oil separators and intelligent oil management system.
   5. Provide spring mounted vibration isolators.

2.04 BRANCH SELECTOR UNITS

A. Branch Selector Units: Concealed boxes designed specifically for this type of system to control heating/cooling mode selection of downstream units; consisting of electronic expansion valves, subcooling heat exchanger, refrigerant control piping and electronics to facilitate communications between unit and main processor and between branch unit and indoor/evaporator units.
   1. Control direction of refrigerant flow using electronic expansion valves; use of solenoid valves for changeover and pressure equalization is not permitted due to refrigerant noise; use of multi-port branch selector boxes is not permitted unless spare ports are provided for redundancy.
   2. Provide one electronic expansion valve for each downstream unit served, except multiple indoor/evaporator units may be connected, provided balancing joints are used in downstream piping and total capacity is within capacity range of the branch selector.
   3. When branch unit is simultaneously heating and cooling, energize subcooling heat exchanger.
   4. Casing: Galvanized steel sheet; with flame and heat resistant foamed polyethylene sound and thermal insulation.
   5. Refrigerant Connections: Braze type.
   6. Condensate Drainage: Provide unit that does not require condensate drainage.

2.05 INDOOR/EVAPORATOR UNITS

A. All Indoor/Evaporator Units: Factory assembled and tested DX fan-coil units, with electronic proportional expansion valve, control circuit board, factory wiring and piping, self-diagnostics, auto-restart function, 3-minute fused time delay, and test run switch.
   1. Refrigerant: Refrigerant circuits factory-charged with dehydrated air, for field charging.
   2. Temperature Control Mechanism: Return air thermistor and computerized Proportional-Integral-Derivative (PID) control of superheat.

3. Coils: Direct expansion type constructed from copper tubes expanded into aluminum fins to form a mechanical bond; waffle louver fin and high heat exchange, rifled bore tube design; factory tested.
   a. Provide thermistor on liquid and gas lines.
4. Fans: Direct-drive, with statically and dynamically balanced impellers; high and low speeds unless otherwise indicated; motor thermally protected.
5. Return Air Filter: Washable long-life net filter with mildew proof resin, unless otherwise indicated.
6. Condensate Drainage: Built-in condensate drain pan with PVC drain connection.
7. Cabinet Insulation: Sound absorbing foamed polystyrene and polyethylene insulation.

B. Recessed Ceiling Units - 2 FT by 2 FT: Four-way airflow cassette with central return air grille, sized for installation in standard 24 by 24 inch lay-in ceiling grid.
   1. Cabinet Height: Maximum of 12 inches above face of ceiling.
   2. Exposed Housing: White, impact resistant, with washable decoration panel.
   3. Maintenance Access: All electrical components accessible through decoration panel.
   4. Supply Airflow Adjustment:
      a. Via motorized louvers which can be horizontally and vertically adjusted from 0 to 90 degrees.
      b. Field-modifiable to 3-way and 2-way airflow.
      c. Three auto-swing positions, including standard, draft prevention and ceiling stain prevention.
   5. Sound Pressure: Measured at low speed at 5 feet below unit.
   6. Fan: Direct-drive turbo type.
   7. Condensate Pump: Built-in, with lift of 21 inches, minimum.
   8. Provide side-mounted supply air branch duct connection.
   9. Provide side-mounted fresh air intake duct connection.

PART 3 EXECUTION

3.01 INSTALLATION

A. Install in accordance with manufacturer's instructions.

B. Install refrigerant piping in accordance with equipment manufacturer's instructions.

C. Perform wiring in accordance with NFPA 70, National Electric Code (NEC).

D. Coordinate with installers of systems and equipment connecting to this system.

3.02 SYSTEM STARTUP

A. Prepare and start equipment and system in accordance with manufacturer's instructions and recommendations.

B. Adjust equipment for proper operation within manufacturer's published tolerances.

3.03 CLEANING

A. Clean exposed components of dirt, finger marks, and other disfigurements.

END OF SECTION

SECTION 26 0505
SELECTIVE DEMOLITION FOR ELECTRICAL

PART 1 GENERAL

1.01 SECTION INCLUDES

A. Electrical demolition.

PART 3 EXECUTION

2.01 EXAMINATION

A. Verify that abandoned wiring and equipment serve only abandoned facilities.

B. Demolition drawings are based on casual field observation and existing record documents.

C. Beginning of demolition means installer accepts existing conditions.

2.02 PREPARATION

A. Disconnect electrical systems in walls, floors, and ceilings to be removed.

B. Coordinate utility service outages with utility company.

C. Provide temporary wiring and connections to maintain existing systems in service during construction. When work must be performed on energized equipment or circuits, use personnel experienced in such operations.

D. Existing Electrical Service: Maintain existing system in service until new system is complete and ready for service. Disable system only to make switchovers and connections. Minimize outage duration.

2.03 DEMOLITION AND EXTENSION OF EXISTING ELECTRICAL WORK

A. Remove, relocate, and extend existing installations to accommodate new construction.

B. Remove abandoned wiring to source of supply.

C. Remove exposed abandoned conduit, including abandoned conduit above accessible ceiling finishes. Cut conduit flush with walls and floors, and patch surfaces.

D. Disconnect abandoned outlets and remove devices. Remove abandoned outlets if conduit servicing them is abandoned and removed. Provide blank cover for abandoned outlets that are not removed.

E. Repair adjacent construction and finishes damaged during demolition and extension work.

F. Maintain access to existing electrical installations that remain active. Modify installation or provide access panel as appropriate.

G. Extend existing installations using materials and methods compatible with existing electrical installations, or as specified.

END OF SECTION

SECTION 26 0519
LOW-VOLTAGE ELECTRICAL POWER CONDUCTORS AND CABLES

PART 1 GENERAL

1.01 SECTION INCLUDES

A. Single conductor building wire.

B. Armored cable.

C. Metal-clad cable.

D. Wiring connectors.

E. Electrical tape.

F. Heat shrink tubing.

G. Wire pulling lubricant.

H. Cable ties.

1.02 RELATED REQUIREMENTS

A. Section 07 8400 - Firestopping.

B. Section 26 0505 - Selective Demolition for Electrical: Disconnection, removal, and/or extension of existing electrical conductors and cables.

C. Section 26 0526 - Grounding and Bonding for Electrical Systems: Additional requirements for grounding conductors and grounding connectors.

D. Section 26 0553 - Identification for Electrical Systems: Identification products and requirements.

1.03 REFERENCE STANDARDS

A. ASTM B3 - Standard Specification for Soft or Annealed Copper Wire; 2013.

B. ASTM B8 - Standard Specification for Concentric-Lay-Stranded Copper Conductors, Hard, Medium-Hard, or Soft; 2011 (Reapproved 2017).

C. ASTM B33 - Standard Specification for Tin-Coated Soft or Annealed Copper Wire for Electrical Purposes; 2010 (Reapproved 2014).

D. ASTM B787/B787M - Standard Specification for 19 Wire Combination Unilay-Stranded Copper Conductors for Subsequent Insulation; 2004 (Reapproved 2014).

E. ASTM D3005 - Standard Specification for Low-Temperature Resistant Vinyl Chloride Plastic Pressure-Sensitive Electrical Insulating Tape; 2017.

F. ASTM D4388 - Standard Specification for Nonmetallic Semi-Conducting and Electrically Insulating Rubber Tapes; 2013.

G. NECA 1 - Standard for Good Workmanship in Electrical Construction; 2015.

H. NECA 120 - Standard for Installing Armored Cable (AC) and Metal-Clad Cable (MC); 2012.

I. NEMA WC 70 - Power Cables Rated 2000 Volts or Less for the Distribution of Electrical Energy; 2009.

J. NFPA 70 - National Electrical Code; Most Recent Edition Adopted by Authority Having Jurisdiction, Including All Applicable Amendments and Supplements.

K. UL 4 - Armored Cable; Current Edition, Including All Revisions.

L. UL 44 - Thermoset-Insulated Wires and Cables; Current Edition, Including All Revisions.

M. UL 83 - Thermoplastic-Insulated Wires and Cables; Current Edition, Including All Revisions.

N. UL 486A-486B - Wire Connectors; Current Edition, Including All Revisions.

O. UL 486C - Splicing Wire Connectors; Current Edition, Including All Revisions.

P. UL 486D - Sealed Wire Connector Systems; Current Edition, Including All Revisions.

Q. UL 510 - Polyvinyl Chloride, Polyethylene, and Rubber Insulating Tape; Current Edition, Including All Revisions.

R. UL 1569 - Metal-Clad Cables; Current Edition, Including All Revisions.

1.04 SUBMITTALS

A. See Section 01 3000 - Administrative Requirements, for submittal procedures.

B. Product Data: Provide manufacturer's standard catalog pages and data sheets for conductors and cables, including detailed information on materials, construction, ratings, listings, and available sizes, configurations, and stranding.

1.05 QUALITY ASSURANCE

A. Conform to requirements of NFPA 70.

1.06 DELIVERY, STORAGE, AND HANDLING

A. Receive, inspect, handle, and store conductors and cables in accordance with manufacturer's instructions.

PART 2 PRODUCTS

2.01 CONDUCTOR AND CABLE APPLICATIONS

A. Do not use conductors and cables for applications other than as permitted by NFPA 70 and product listing.

B. Provide single conductor building wire installed in suitable raceway unless otherwise indicated, permitted, or required.

C. Nonmetallic-sheathed cable is not permitted.

D. Armored cable is permitted only as follows:
   1. Where not otherwise restricted, may be used:
      a. Where concealed above accessible ceilings for final connections from junction boxes to luminaires.
         1) Maximum Length: 6 feet (1.8 m).

E. Metal-clad cable is permitted only as follows:
   1. Where not otherwise restricted, may be used:
      a. Where concealed above accessible ceilings for final connections from junction boxes to luminaires.
         1) Maximum Length: 6 feet (1.8 m).

2.02 CONDUCTOR AND CABLE GENERAL REQUIREMENTS

A. Provide products that comply with requirements of NFPA 70.

B. Provide products listed, classified, and labeled as suitable for the purpose intended.

C. Unless specifically indicated to be excluded, provide all required conduit, boxes, wiring, connectors, etc. as required for a complete operating system.

D. Comply with NEMA WC 70.

E. Thermoplastic-Insulated Conductors and Cables: Listed and labeled as complying with UL 83.

F. Thermoset-Insulated Conductors and Cables: Listed and labeled as complying with UL 44.

G. Conductor Material:
   1. Provide copper conductors only. Aluminum conductors are not acceptable for this project. Conductor sizes indicated are based on copper.
   2. Copper Conductors: Soft drawn annealed, 98 percent conductivity, uncoated copper conductors complying with ASTM B3, ASTM B8, or ASTM B787/B787M unless otherwise indicated.
   3. Tinned Copper Conductors: Comply with ASTM B33.

H. Minimum Conductor Size:
   1. Branch Circuits: 12 AWG.

a. Exceptions:
1) 20 A, 120 V circuits longer than 75 feet (23 m): 10 AWG, for voltage drop.
2) 20 A, 120 V circuits longer than 150 feet (46 m): 8 AWG, for voltage drop.
3) 20 A, 277 V circuits longer than 150 feet (46 m): 10 AWG, for voltage drop.

I. Where conductor size is not indicated, size to comply with NFPA 70 but not less than applicable minimum size requirements specified.

J. Conductor Color Coding:
1. Color Coding Method: Integrally colored insulation.
2. Color Code:
a. 208Y/120 V, 3 Phase, 4 Wire System:
1) Phase A: Black.
2) Phase B: Red.
3) Phase C: Blue.
4) Neutral/Grounded: White.
b. Equipment Ground, All Systems: Green.

2.03 SINGLE CONDUCTOR BUILDING WIRE

A. Manufacturers:
1. Copper Building Wire:
a. Cerro Wire LLC: www.cerrowire.com.
b. Encore Wire Corporation: www.encorewire.com.
c. Southwire Company: www.southwire.com.

B. Description: Single conductor insulated wire.

C. Conductor Stranding:
1. Feeders and Branch Circuits:
a. Size 10 AWG and Smaller: Solid.
b. Size 8 AWG and Larger: Stranded.

D. Insulation Voltage Rating: 600 V.

E. Insulation:
1. Copper Building Wire: Type THHN/THWN or THHN/THWN-2, except as indicated below.

2.04 ARMORED CABLE

A. Manufacturers:
1. AFC Cable Systems Inc: www.afcweb.com.
2. Encore Wire Corporation: www.encorewire.com.
3. Southwire Company: www.southwire.com.

B. Description: NFPA 70, Type AC cable listed and labeled as complying with UL 4, and listed for use in classified firestop systems to be used.

C. Conductor Stranding:
1. Size 10 AWG and Smaller: Solid.
2. Size 8 AWG and Larger: Stranded.

D. Insulation Voltage Rating: 600 V.

E. Insulation: Type THHN.

F. Grounding: Combination of interlocking armor and integral bonding wire.

G. Armor: Steel, interlocked tape.

2.05 METAL-CLAD CABLE

A. Manufacturers:
1. Encore Wire Corporation: www.encorewire.com.
2. Southwire Company: www.southwire.com.

B. Description: NFPA 70, Type MC cable listed and labeled as complying with UL 1569, and listed for use in classified firestop systems to be used.

C. Conductor Stranding:
   1. Size 10 AWG and Smaller: Solid.
   2. Size 8 AWG and Larger: Stranded.

D. Insulation Voltage Rating: 600 V.

E. Insulation: Type THHN, THHN/THWN, or THHN/THWN-2.

F. Grounding: Full-size integral equipment grounding conductor.

G. Armor: Steel, interlocked tape.

2.06 WIRING CONNECTORS

A. Description: Wiring connectors appropriate for the application, suitable for use with the conductors to be connected, and listed as complying with UL 486A-486B or UL 486C as applicable.

B. Connectors for Grounding and Bonding: Comply with Section 26 0526.

C. Wiring Connectors for Splices and Taps:
   1. Copper Conductors Size 8 AWG and Smaller: Use twist-on insulated spring connectors.
   2. Copper Conductors Size 6 AWG and Larger: Use mechanical connectors or compression connectors.

D. Twist-on Insulated Spring Connectors: Rated 600 V, 221 degrees F (105 degrees C) for standard applications and 302 degrees F (150 degrees C) for high temperature applications; pre-filled with sealant and listed as complying with UL 486D for damp and wet locations.

E. Mechanical Connectors: Provide bolted type or set-screw type.
   1. Manufacturers:
      a. Burndy LLC; www.burndy.com.
      b. Ilsco: www.ilsco.com.
      c. Thomas & Betts Corporation: www.tnb.com.

F. Compression Connectors: Provide circumferential type or hex type crimp configuration.
   1. Manufacturers:
      a. Burndy LLC; www.burndy.com.
      b. Ilsco: www.ilsco.com.
      c. Thomas & Betts Corporation: www.tnb.com.

G. Crimped Terminals: Nylon-insulated, with insulation grip and terminal configuration suitable for connection to be made.

2.07 WIRING ACCESSORIES

A. Electrical Tape:
   1. Manufacturers:
      a. 3M: www.3m.com.
      b. Plymouth Rubber Europa: www.plymouthrubber.com.
   2. Vinyl Color Coding Electrical Tape: Integrally colored to match color code indicated; listed as complying with UL 510; minimum thickness of 7 mil (0.18 mm); resistant to abrasion, corrosion, and sunlight; suitable for continuous temperature environment up to 221 degrees F (105 degrees C).
   3. Vinyl Insulating Electrical Tape: Complying with ASTM D3005 and listed as complying with UL 510; minimum thickness of 7 mil (0.18 mm); resistant to abrasion, corrosion, and sunlight; conformable for application down to 0 degrees F (-18 degrees C) and suitable for continuous temperature environment up to 221 degrees F (105 degrees C).
   4. Rubber Splicing Electrical Tape: Ethylene Propylene Rubber (EPR) tape, complying with ASTM D4388; minimum thickness of 30 mil (0.76 mm); suitable for continuous temperature environment up to 194 degrees F (90 degrees C) and short-term 266 degrees F (130 degrees C) overload service.

5. Electrical Filler Tape: Rubber-based insulating moldable putty, minimum thickness of 125 mil (3.2 mm); suitable for continuous temperature environment up to 176 degrees F (80 degrees C).

B. Heat Shrink Tubing: Heavy-wall, split-resistant, with factory-applied adhesive; rated 600 V; suitable for direct burial applications; listed as complying with UL 486D.
   1. Manufacturers:
      a. 3M: www.3m.com.
      b. Burndy LLC; www.burndy.com.
      c. Thomas & Betts Corporation: www.tnb.com.

C. Wire Pulling Lubricant: Listed; suitable for use with the conductors or cables to be installed and suitable for use at the installation temperature.

D. Cable Ties: Material and tensile strength rating suitable for application.

PART 3 EXECUTION

3.01 EXAMINATION

A. Verify that interior of building has been protected from weather.

B. Verify that work likely to damage wire and cable has been completed.

C. Verify that raceways, boxes, and equipment enclosures are installed and are properly sized to accommodate conductors and cables in accordance with NFPA 70.

D. Verify that field measurements are as indicated.

E. Verify that conditions are satisfactory for installation prior to starting work.

3.02 INSTALLATION

A. Circuiting Requirements:
   1. Unless dimensioned, circuit routing indicated is diagrammatic.
   2. When circuit destination is indicated without specific routing, determine exact routing required.
   3. Arrange circuiting to minimize splices.

B. Install products in accordance with manufacturer's instructions.

C. Perform work in accordance with NECA 1 (general workmanship).

D. Install armored cable (Type AC) in accordance with NECA 120.

E. Install metal-clad cable (Type MC) in accordance with NECA 120.

F. Installation in Raceway:
   1. Tape ends of conductors and cables to prevent infiltration of moisture and other contaminants.
   2. Pull all conductors and cables together into raceway at same time.
   3. Do not damage conductors and cables or exceed manufacturer's recommended maximum pulling tension and sidewall pressure.
   4. Use suitable wire pulling lubricant where necessary, except when lubricant is not recommended by the manufacturer.

G. Paralleled Conductors: Install conductors of the same length and terminate in the same manner.

H. Secure and support conductors and cables in accordance with NFPA 70 using suitable supports and methods approved by the authority having jurisdiction. Provide independent support from building structure. Do not provide support from raceways, piping, ductwork, or other systems.

I. Terminate cables using suitable fittings.
   1. Armored Cable (Type AC):
      a. Use listed fittings and anti-short, insulating bushings.
      b. Cut cable armor only using specialized tools to prevent damaging conductors or insulation. Do not use hacksaw or wire cutters to cut armor.
   2. Metal-Clad Cable (Type MC):

a. Use listed fittings.
b. Cut cable armor only using specialized tools to prevent damaging conductors or insulation. Do not use hacksaw or wire cutters to cut armor.

J. Install conductors with a minimum of 12 inches (300 mm) of slack at each outlet.

K. Neatly train and bundle conductors inside boxes, wireways, panelboards and other equipment enclosures.

L. Group or otherwise identify neutral/grounded conductors with associated ungrounded conductors inside enclosures in accordance with NFPA 70.

M. Make wiring connections using specified wiring connectors.
1. Make splices and taps only in accessible boxes. Do not pull splices into raceways or make splices in conduit bodies or wiring gutters.
2. Remove appropriate amount of conductor insulation for making connections without cutting, nicking or damaging conductors.
3. Do not remove conductor strands to facilitate insertion into connector.
4. Clean contact surfaces on conductors and connectors to suitable remove corrosion, oxides, and other contaminates. Do not use wire brush on plated connector surfaces.
5. Mechanical Connectors: Secure connections according to manufacturer's recommended torque settings.
6. Compression Connectors: Secure connections using manufacturer's recommended tools and dies.

N. Insulate splices and taps that are made with uninsulated connectors using methods suitable for the application, with insulation and mechanical strength at least equivalent to unspliced conductors.

O. Insulate ends of spare conductors using vinyl insulating electrical tape.

P. Install firestopping to preserve fire resistance rating of partitions and other elements, using materials and methods specified in Section 07 8400.

Q. Unless specifically indicated to be excluded, provide final connections to all equipment and devices, including those furnished by others, as required for a complete operating system.

END OF SECTION

SECTION 26 0529
HANGERS AND SUPPORTS FOR ELECTRICAL SYSTEMS

PART 1 GENERAL

1.01 SECTION INCLUDES

A. Support and attachment components for equipment, conduit, cable, boxes, and other electrical work.

1.02 RELATED REQUIREMENTS

A. Section 26 0533.13 - Conduit for Electrical Systems: Additional support and attachment requirements for conduits.

B. Section 26 0533.16 - Boxes for Electrical Systems: Additional support and attachment requirements for boxes.

C. Section 26 5100 - Interior Lighting: Additional support and attachment requirements for interior luminaires.

1.03 REFERENCE STANDARDS

A. ASTM A123/A123M - Standard Specification for Zinc (Hot-Dip Galvanized) Coatings on Iron and Steel Products; 2017.

B. ASTM A153/A153M - Standard Specification for Zinc Coating (Hot-Dip) on Iron and Steel Hardware; 2016a.

C. ASTM B633 - Standard Specification for Electrodeposited Coatings of Zinc on Iron and Steel; 2015.

D. MFMA-4 - Metal Framing Standards Publication; 2004.

E. NECA 1 - Standard for Good Workmanship in Electrical Construction; 2015.

F. NFPA 70 - National Electrical Code; Most Recent Edition Adopted by Authority Having Jurisdiction, Including All Applicable Amendments and Supplements.

1.04 SUBMITTALS

A. See Section 01 3000 - Administrative Requirements, for submittal procedures.

B. Product Data: Provide manufacturer's standard catalog pages and data sheets for metal channel (strut) framing systems, non-penetrating rooftop supports, and post-installed concrete and masonry anchors.

1.05 QUALITY ASSURANCE

A. Comply with NFPA 70.

B. Comply with applicable building code.

PART 2 PRODUCTS

2.01 SUPPORT AND ATTACHMENT COMPONENTS

A. General Requirements:
   1. Provide all required hangers, supports, anchors, fasteners, fittings, accessories, and hardware as necessary for the complete installation of electrical work.
   2. Provide products listed, classified, and labeled as suitable for the purpose intended, where applicable.
   3. Where support and attachment component types and sizes are not indicated, select in accordance with manufacturer's application criteria as required for the load to be supported with a minimum safety factor of __1___. Include consideration for vibration, equipment operation, and shock loads where applicable.
   4. Do not use products for applications other than as permitted by NFPA 70 and product listing.
   5. Steel Components: Use corrosion resistant materials suitable for the environment where installed.

a. Zinc-Plated Steel: Electroplated in accordance with ASTM B633.
b. Galvanized Steel: Hot-dip galvanized after fabrication in accordance with ASTM A123/A123M or ASTM A153/A153M.

B. Conduit and Cable Supports: Straps, clamps, etc. suitable for the conduit or cable to be supported.
1. Conduit Straps: One-hole or two-hole type; steel or malleable iron.
2. Conduit Clamps: Bolted type unless otherwise indicated.
3. Manufacturers:
a. Cooper Crouse-Hinds, a division of Eaton Corporation; www.cooperindustries.com.
b. Erico International Corporation; www.erico.com.
c. O-Z/Gedney, a brand of Emerson Industrial Automation; www.emersonindustrial.com.
d. Thomas & Betts Corporation; www.tnb.com.

C. Outlet Box Supports: Hangers, brackets, etc. suitable for the boxes to be supported.
1. Manufacturers:
a. Cooper Crouse-Hinds, a division of Eaton Corporation; www.cooperindustries.com.
b. Erico International Corporation; www.erico.com.
c. O-Z/Gedney, a brand of Emerson Industrial Automation; www.emersonindustrial.com.
d. Thomas & Betts Corporation; www.tnb.com.

D. Hanger Rods: Threaded zinc-plated steel unless otherwise indicated.
1. Minimum Size, Unless Otherwise Indicated or Required:
a. Equipment Supports: 1/2 inch (13 mm) diameter.
b. Single Conduit up to 1 inch (27 mm) trade size: 1/4 inch (6 mm) diameter.
c. Single Conduit larger than 1 inch (27 mm) trade size: 3/8 inch (10 mm) diameter.
d. Outlet Boxes: 1/4 inch (6 mm) diameter.
e. Luminaires: 1/4 inch (6 mm) diameter.

E. Anchors and Fasteners:
1. Unless otherwise indicated and where not otherwise restricted, use the anchor and fastener types indicated for the specified applications.

PART 3 EXECUTION

3.01 EXAMINATION

A. Verify that field measurements are as indicated.

B. Verify that mounting surfaces are ready to receive support and attachment components.

C. Verify that conditions are satisfactory for installation prior to starting work.

3.02 INSTALLATION

A. Install products in accordance with manufacturer's instructions.

B. Perform work in accordance with NECA 1 (general workmanship).

C. Provide independent support from building structure. Do not provide support from piping, ductwork, or other systems.

D. Unless specifically indicated or approved by Architect, do not provide support from suspended ceiling support system or ceiling grid.

E. Unless specifically indicated or approved by Architect, do not provide support from roof deck.

F. Do not penetrate or otherwise notch or cut structural members without approval of Structural Engineer.

G. Equipment Support and Attachment:

1. Use metal fabricated supports or supports assembled from metal channel (strut) to support equipment as required.
2. Use metal channel (strut) secured to studs to support equipment surface-mounted on hollow stud walls when wall strength is not sufficient to resist pull-out.
3. Use metal channel (strut) to support surface-mounted equipment in wet or damp locations to provide space between equipment and mounting surface.
4. Securely fasten floor-mounted equipment. Do not install equipment such that it relies on its own weight for support.

H. Secure fasteners according to manufacturer's recommended torque settings.

I. Remove temporary supports.

END OF SECTION

SECTION 26 0533.13
CONDUIT FOR ELECTRICAL SYSTEMS

PART 1 GENERAL

1.01 SECTION INCLUDES

A. Galvanized steel rigid metal conduit (RMC).

B. Intermediate metal conduit (IMC).

C. PVC-coated galvanized steel rigid metal conduit (RMC).

D. Flexible metal conduit (FMC).

E. Liquidtight flexible metal conduit (LFMC).

F. Electrical metallic tubing (EMT).

G. Liquidtight flexible nonmetallic conduit (LFNC).

H. Conduit fittings.

1.02 RELATED REQUIREMENTS

A. Section 07 8400 - Firestopping.

B. Section 26 0519 - Low-Voltage Electrical Power Conductors and Cables: Metal clad cable (Type MC), armored cable (Type AC), and manufactured wiring systems, including uses permitted.

C. Section 26 0526 - Grounding and Bonding for Electrical Systems.
   1. Includes additional requirements for fittings for grounding and bonding.

D. Section 26 0529 - Hangers and Supports for Electrical Systems.

E. Section 26 0533.16 - Boxes for Electrical Systems.

F. Section 26 0553 - Identification for Electrical Systems: Identification products and requirements.

1.03 REFERENCE STANDARDS

A. ANSI C80.1 - American National Standard for Electrical Rigid Steel Conduit (ERSC); 2015.

B. ANSI C80.3 - American National Standard for Electrical Metallic Tubing -- Steel (EMT-S); 2015.

C. ANSI C80.6 - American National Standard for Electrical Intermediate Metal Conduit (EIMC); 2005.

D. NECA 1 - Standard for Good Workmanship in Electrical Construction; 2015.

E. NECA 101 - Standard for Installing Steel Conduits (Rigid, IMC, EMT); 2013.

F. NECA 111 - Standard for Installing Nonmetallic Raceways (RNC, ENT, LFNC); 2003.

G. NEMA FB 1 - Fittings, Cast Metal Boxes, and Conduit Bodies for Conduit, Electrical Metallic Tubing, and Cable; 2014.

H. NEMA RN 1 - Polyvinyl-Chloride (PVC) Externally Coated Galvanized Rigid Steel Conduit and Intermediate Metal Conduit; 2005 (Reaffirmed 2013).

I. NFPA 70 - National Electrical Code; Most Recent Edition Adopted by Authority Having Jurisdiction, Including All Applicable Amendments and Supplements.

J. UL 1 - Flexible Metal Conduit; Current Edition, Including All Revisions.

K. UL 6 - Electrical Rigid Metal Conduit-Steel; Current Edition, Including All Revisions.

L. UL 360 - Liquid-Tight Flexible Steel Conduit; Current Edition, Including All Revisions.

M. UL 514B - Conduit, Tubing, and Cable Fittings; Current Edition, Including All Revisions.

N. UL 797 - Electrical Metallic Tubing-Steel; Current Edition, Including All Revisions.

O. UL 1242 - Electrical Intermediate Metal Conduit-Steel; Current Edition, Including All Revisions.

P. UL 1660 - Liquid-Tight Flexible Nonmetallic Conduit; Current Edition, Including All Revisions.

1.04 SUBMITTALS

A. See Section 01 3000 - Administrative Requirements for submittals procedures.

B. Product Data: Provide manufacturer's standard catalog pages and data sheets for conduits and fittings.

1.05 QUALITY ASSURANCE

A. Conform to requirements of NFPA 70.

PART 2 PRODUCTS

2.01 CONDUIT APPLICATIONS

A. Do not use conduit and associated fittings for applications other than as permitted by NFPA 70 and product listing.

B. Unless otherwise indicated and where not otherwise restricted, use the conduit types indicated for the specified applications. Where more than one listed application applies, comply with the most restrictive requirements. Where conduit type for a particular application is not specified, use galvanized steel rigid metal conduit.

C. Concealed Within Hollow Stud Walls: Use galvanized steel rigid metal conduit, intermediate metal conduit (IMC), or electrical metallic tubing (EMT).

D. Concealed Above Accessible Ceilings: Use galvanized steel rigid metal conduit, intermediate metal conduit (IMC), or electrical metallic tubing (EMT).

E. Exposed, Exterior: Use galvanized steel rigid metal conduit, intermediate metal conduit (IMC), or PVC-coated galvanized steel rigid metal conduit.

2.02 CONDUIT REQUIREMENTS

A. Existing Work: Where existing conduits are indicated to be reused, they may be reused only where they comply with specified requirements, are free from corrosion, and integrity is verified by pulling a mandrel through them.

B. Provide all conduit, fittings, supports, and accessories required for a complete raceway system.

C. Provide products listed, classified, and labeled as suitable for the purpose intended.

D. Where conduit size is not indicated, size to comply with NFPA 70 but not less than applicable minimum size requirements specified.

2.03 GALVANIZED STEEL RIGID METAL CONDUIT (RMC)

A. Description: NFPA 70, Type RMC galvanized steel rigid metal conduit complying with ANSI C80.1 and listed and labeled as complying with UL 6.

B. Fittings:
   1. Non-Hazardous Locations: Use fittings complying with NEMA FB 1 and listed and labeled as complying with UL 514B.
   2. Material: Use steel or malleable iron.
   3. Connectors and Couplings: Use threaded type fittings only. Threadless set screw and compression (gland) type fittings are not permitted.

2.04 INTERMEDIATE METAL CONDUIT (IMC)

A. Description: NFPA 70, Type IMC galvanized steel intermediate metal conduit complying with ANSI C80.6 and listed and labeled as complying with UL 1242.

B. Fittings:
   1. Non-Hazardous Locations: Use fittings complying with NEMA FB 1 and listed and labeled as complying with UL 514B.
   2. Material: Use steel or malleable iron.
   3. Connectors and Couplings: Use threaded type fittings only. Threadless set screw and compression (gland) type fittings are not permitted.

2.05 PVC-COATED GALVANIZED STEEL RIGID METAL CONDUIT (RMC)

A. Description: NFPA 70, Type RMC galvanized steel rigid metal conduit with external polyvinyl chloride (PVC) coating complying with NEMA RN 1 and listed and labeled as complying with UL 6.

B. Exterior Coating: Polyvinyl chloride (PVC), nominal thickness of 40 mil (1.02 mm).

C. PVC-Coated Fittings:
   1. Manufacturer: Same as manufacturer of PVC-coated conduit to be installed.
   2. Non-Hazardous Locations: Use fittings listed and labeled as complying with UL 514B.
   3. Material: Use steel or malleable iron.
   4. Exterior Coating: Polyvinyl chloride (PVC), minimum thickness of 40 mil (1.02 mm).

D. PVC-Coated Supports: Furnish with exterior coating of polyvinyl chloride (PVC), minimum thickness of 15 mil (0.38 mm).

2.06 FLEXIBLE METAL CONDUIT (FMC)

A. Description: NFPA 70, Type FMC standard wall steel flexible metal conduit listed and labeled as complying with UL 1, and listed for use in classified firestop systems to be used.

B. Fittings:
   1. Description: Fittings complying with NEMA FB 1 and listed and labeled as complying with UL 514B.
   2. Material: Use steel or malleable iron.

2.07 LIQUIDTIGHT FLEXIBLE METAL CONDUIT (LFMC)

A. Description: NFPA 70, Type LFMC polyvinyl chloride (PVC) jacketed steel flexible metal conduit listed and labeled as complying with UL 360.

B. Fittings:
   1. Description: Fittings complying with NEMA FB 1 and listed and labeled as complying with UL 514B.
   2. Material: Use steel or malleable iron.

2.08 ELECTRICAL METALLIC TUBING (EMT)

A. Description: NFPA 70, Type EMT steel electrical metallic tubing complying with ANSI C80.3 and listed and labeled as complying with UL 797.

B. Fittings:
   1. Description: Fittings complying with NEMA FB 1 and listed and labeled as complying with UL 514B.
   2. Material: Use steel or malleable iron.
   3. Connectors and Couplings: Use compression (gland) or set-screw type.
      a. Do not use indenter type connectors and couplings.

2.09 LIQUIDTIGHT FLEXIBLE NONMETALLIC CONDUIT (LFNC)

A. Description: NFPA 70, Type LFNC liquidtight flexible nonmetallic conduit listed and labeled as complying with UL 1660.

B. Fittings:
   1. Manufacturer: Same as manufacturer of conduit to be connected.
   2. Description: Fittings complying with NEMA FB 1 and listed and labeled as complying with UL 514B; suitable for the type of conduit to be connected.

PART 3 EXECUTION

3.01 INSTALLATION

A. Install products in accordance with manufacturer's instructions.

B. Perform work in accordance with NECA 1 (general workmanship).

C. Install galvanized steel rigid metal conduit (RMC) in accordance with NECA 101.

D. Install intermediate metal conduit (IMC) in accordance with NECA 101.

E. Install PVC-coated galvanized steel rigid metal conduit (RMC) using only tools approved by the manufacturer.

F. Install liquidtight flexible nonmetallic conduit (LFNC) in accordance with NECA 111.

G. Conduit Support:
   1. Secure and support conduits in accordance with NFPA 70 and Section 26 0529 using suitable supports and methods approved by the authority having jurisdiction.
   2. Provide independent support from building structure. Do not provide support from piping, ductwork, or other systems.

H. Connections and Terminations:
   1. Use approved zinc-rich paint or conduit joint compound on field-cut threads of galvanized steel conduits prior to making connections.
   2. Where two threaded conduits must be joined and neither can be rotated, use three-piece couplings or split couplings. Do not use running threads.
   3. Use suitable adapters where required to transition from one type of conduit to another.
   4. Provide drip loops for liquidtight flexible conduit connections to prevent drainage of liquid into connectors.
   5. Terminate threaded conduits in boxes and enclosures using threaded hubs or double lock nuts for dry locations and raintight hubs for wet locations.
   6. Provide insulating bushings or insulated throats at all conduit terminations to protect conductors.
   7. Secure joints and connections to provide maximum mechanical strength and electrical continuity.

I. Penetrations:
   1. Do not penetrate or otherwise notch or cut structural members, including footings and grade beams, without approval of Structural Engineer.
   2. Make penetrations perpendicular to surfaces unless otherwise indicated.
   3. Provide sleeves for penetrations as indicated or as required to facilitate installation. Set sleeves flush with exposed surfaces unless otherwise indicated or required.
   4. Conceal bends for conduit risers emerging above ground.
   5. Seal interior of conduits entering the building from underground at first accessible point to prevent entry of moisture and gases.
   6. Where conduits penetrate waterproof membrane, seal as required to maintain integrity of membrane.
   7. Make penetrations for roof-mounted equipment within associated equipment openings and curbs where possible to minimize roofing system penetrations. Where penetrations are necessary, seal as indicated or as required to preserve integrity of roofing system and maintain roof warranty. Include proposed locations of penetrations and methods for sealing with submittals.
   8. Install firestopping to preserve fire resistance rating of partitions and other elements, using materials and methods specified in Section 07 8400.

J. Conduit Movement Provisions: Where conduits are subject to movement, provide expansion and expansion/deflection fittings to prevent damage to enclosed conductors or connected equipment. This includes, but is not limited to:
   1. Where conduits cross structural joints intended for expansion, contraction, or deflection.
   2. Where conduits are subject to earth movement by settlement or frost.

K. Condensation Prevention: Where conduits cross barriers between areas of potential substantial temperature differential, provide sealing fitting or approved sealing compound at an accessible point near the penetration to prevent condensation. This includes, but is not limited to:
   1. Where conduits pass from outdoors into conditioned interior spaces.
   2. Where conduits pass from unconditioned interior spaces into conditioned interior spaces.

L. Provide grounding and bonding in accordance with Section 26 0526.

END OF SECTION

SECTION 26 0533.16
BOXES FOR ELECTRICAL SYSTEMS

PART 1 GENERAL

1.01 SECTION INCLUDES

A. Outlet and device boxes up to 100 cubic inches (1,650 cu cm), including those used as junction and pull boxes.

B. Cabinets and enclosures, including junction and pull boxes larger than 100 cubic inches (1,650 cu cm).

1.02 RELATED REQUIREMENTS

A. Section 26 0526 - Grounding and Bonding for Electrical Systems.

B. Section 26 0529 - Hangers and Supports for Electrical Systems.

C. Section 26 0533.13 - Conduit for Electrical Systems:
   1. Conduit bodies and other fittings.

D. Section 26 0553 - Identification for Electrical Systems: Identification products and requirements.

E. Section 26 2726 - Wiring Devices:
   1. Wall plates.
   2. Access floor boxes.

1.03 REFERENCE STANDARDS

A. NECA 1 - Standard for Good Workmanship in Electrical Construction; 2015.

B. NECA 130 - Standard for Installing and Maintaining Wiring Devices; 2010.

C. NEMA FB 1 - Fittings, Cast Metal Boxes, and Conduit Bodies for Conduit, Electrical Metallic Tubing, and Cable; 2014.

D. NEMA OS 1 - Sheet-Steel Outlet Boxes, Device Boxes, Covers, and Box Supports; 2013.

E. NEMA 250 - Enclosures for Electrical Equipment (1000 Volts Maximum); 2014.

F. NFPA 70 - National Electrical Code; Most Recent Edition Adopted by Authority Having Jurisdiction, Including All Applicable Amendments and Supplements.

G. UL 50 - Enclosures for Electrical Equipment, Non-Environmental Considerations; Current Edition, Including All Revisions.

H. UL 50E - Enclosures for Electrical Equipment, Environmental Considerations; Current Edition, Including All Revisions.

I. UL 508A - Industrial Control Panels; 2013.

J. UL 514A - Metallic Outlet Boxes; Current Edition, Including All Revisions.

1.04 SUBMITTALS

A. See Section 01 3000 - Administrative Requirements, for submittal procedures.

B. Product Data: Provide manufacturer's standard catalog pages and data sheets for cabinets and enclosures, boxes for hazardous (classified) locations, floor boxes, and underground boxes/enclosures.

1.05 QUALITY ASSURANCE

A. Conform to requirements of NFPA 70.

PART 2 PRODUCTS

2.01 BOXES

A. General Requirements:
   1. Do not use boxes and associated accessories for applications other than as permitted by NFPA 70 and product listing.

2. Provide all boxes, fittings, supports, and accessories required for a complete raceway system and to accommodate devices and equipment to be installed.
3. Provide products listed, classified, and labeled as suitable for the purpose intended.
4. Where box size is not indicated, size to comply with NFPA 70 but not less than applicable minimum size requirements specified.
5. Provide grounding terminals within boxes where equipment grounding conductors terminate.

B. Outlet and Device Boxes Up to 100 cubic inches (1,650 cu cm), Including Those Used as Junction and Pull Boxes:
1. Use sheet-steel boxes for dry locations unless otherwise indicated or required.
2. Use cast iron boxes or cast aluminum boxes for damp or wet locations unless otherwise indicated or required; furnish with compatible weatherproof gasketed covers.
3. Use suitable concrete type boxes where flush-mounted in concrete.
4. Use suitable masonry type boxes where flush-mounted in masonry walls.
5. Use raised covers suitable for the type of wall construction and device configuration where required.
6. Use shallow boxes where required by the type of wall construction.
7. Do not use "through-wall" boxes designed for access from both sides of wall.
8. Sheet-Steel Boxes: Comply with NEMA OS 1, and list and label as complying with UL 514A.
9. Cast Metal Boxes: Comply with NEMA FB 1, and list and label as complying with UL 514A; furnish with threaded hubs.
10. Boxes for Supporting Luminaires and Ceiling Fans: Listed as suitable for the type and weight of load to be supported; furnished with fixture stud to accommodate mounting of luminaire where required.
11. Boxes for Ganged Devices: Use multigang boxes of single-piece construction. Do not use field-connected gangable boxes unless specifically indicated or permitted.
12. Wall Plates: Comply with Section 26 2726.

C. Cabinets and Enclosures, Including Junction and Pull Boxes Larger Than 100 cubic inches (1,650 cu cm):
1. Comply with NEMA 250, and list and label as complying with UL 50 and UL 50E, or UL 508A.
2. NEMA 250 Environment Type, Unless Otherwise Indicated:
3. Junction and Pull Boxes Larger Than 100 cubic inches (1,650 cu cm):
   a. Provide screw-cover or hinged-cover enclosures unless otherwise indicated.

PART 3 EXECUTION

3.01 INSTALLATION

A. Install products in accordance with manufacturer's instructions.

B. Install boxes in accordance with NECA 1 (general workmanship) and, where applicable, NECA 130, including mounting heights specified in those standards where mounting heights are not indicated.

C. Arrange equipment to provide minimum clearances in accordance with manufacturer's instructions and NFPA 70.

D. Box Supports:
1. Secure and support boxes in accordance with NFPA 70 and Section 26 0529 using suitable supports and methods approved by the authority having jurisdiction.
2. Provide independent support from building structure except for cast metal boxes (other than boxes used for fixture support) supported by threaded conduit connections in accordance with NFPA 70. Do not provide support from piping, ductwork, or other systems.

E. Install boxes plumb and level.

F. Flush-Mounted Boxes:

1. Install boxes in noncombustible materials such as concrete, tile, gypsum, plaster, etc. so that front edge of box or associated raised cover is not set back from finished surface more than 1/4 inch (6 mm) or does not project beyond finished surface.
2. Install boxes in combustible materials such as wood so that front edge of box or associated raised cover is flush with finished surface.
3. Repair rough openings around boxes in noncombustible materials such as concrete, tile, gypsum, plaster, etc. so that there are no gaps or open spaces greater than 1/8 inch (3 mm) at the edge of the box.

G. Install boxes as required to preserve insulation integrity.

H. Install firestopping to preserve fire resistance rating of partitions and other elements, using materials and methods specified in Section 07 8400.

I. Close unused box openings.

J. Install blank wall plates on junction boxes and on outlet boxes with no devices or equipment installed or designated for future use.

K. Provide grounding and bonding in accordance with Section 26 0526.

END OF SECTION

SECTION 26 0553
IDENTIFICATION FOR ELECTRICAL SYSTEMS

PART 1 GENERAL

1.01 SECTION INCLUDES

A. Electrical identification requirements.

B. Identification nameplates and labels.

C. Wire and cable markers.

D. Voltage markers.

E. Warning signs and labels.

1.02 RELATED REQUIREMENTS

A. Section 26 0519 - Low-Voltage Electrical Power Conductors and Cables: Color coding for power conductors and cables 600 V and less; vinyl color coding electrical tape.

1.03 REFERENCE STANDARDS

A. ANSI Z535.2 - American National Standard for Environmental and Facility Safety Signs; 2011.

B. ANSI Z535.4 - American National Standard for Product Safety Signs and Labels; 2011.

C. NFPA 70 - National Electrical Code; Most Recent Edition Adopted by Authority Having Jurisdiction, Including All Applicable Amendments and Supplements.

D. UL 969 - Marking and Labeling Systems; Current Edition, Including All Revisions.

1.04 SUBMITTALS

A. See Section 01 3000 - Administrative Requirements for submittals procedures.

PART 2 PRODUCTS

2.01 IDENTIFICATION REQUIREMENTS

A. Identification for Equipment:
   1. Use identification nameplate to identify each piece of electrical distribution and control equipment and associated sections, compartments, and components.
      a. Panelboards:
         1) Identify power source and circuit number. Include location when not within sight of equipment.
         2) Use typewritten circuit directory to identify load(s) served for panelboards with a door. Identify spares and spaces using pencil.
   2. Available Fault Current Documentation: Use identification label to identify the available fault current and date calculations were performed at locations requiring documentation by NFPA 70, including but not limited to the following.
      a. Service equipment.
      b. Industrial control panels.
      c. Motor control centers.
      d. Elevator control panels.
      e. Industrial machinery.

B. Identification for Conductors and Cables:
   1. Color Coding for Power Conductors 600 V and Less: Comply with Section 26 0519.
   2. Use identification nameplate or identification label to identify color code for ungrounded and grounded power conductors inside door or enclosure at each piece of feeder or branch-circuit distribution equipment when premises has feeders or branch circuits served by more than one nominal voltage system.
   3. Use wire and cable markers to identify circuit number or other designation indicated for power, control, and instrumentation conductors and cables at the following locations:
      a. At each source and load connection.

C. Identification for Raceways:

1. Use voltage markers to identify highest voltage present for accessible conduits at maximum intervals of 20 feet (6.1 m).

D. Identification for Devices:
1. Use identification label or engraved wallplate to identify serving branch circuit for all receptacles.

2.02 IDENTIFICATION NAMEPLATES AND LABELS

A. Identification Nameplates:
1. Materials:
2. Mounting Holes for Mechanical Fasteners: Two, centered on sides for sizes up to 1 inch (25 mm) high; Four, located at corners for larger sizes.

B. Identification Labels:
1. Materials: Use self-adhesive laminated plastic labels; UV, chemical, water, heat, and abrasion resistant.
2. Text: Use factory pre-printed or machine-printed text. Do not use handwritten text unless otherwise indicated.

2.03 WIRE AND CABLE MARKERS

A. Markers for Conductors and Cables: Use wrap-around self-adhesive vinyl cloth, wrap-around self-adhesive vinyl self-laminating, heat-shrink sleeve, plastic sleeve, plastic clip-on, or vinyl split sleeve type markers suitable for the conductor or cable to be identified.

B. Markers for Conductor and Cable Bundles: Use plastic marker tags secured by nylon cable ties.

C. Legend: Power source and circuit number or other designation indicated.

D. Text: Use factory pre-printed or machine-printed text, all capitalized unless otherwise indicated.

E. Minimum Text Height: 1/8 inch (3 mm).

F. Color: Black text on white background unless otherwise indicated.

2.04 VOLTAGE MARKERS

A. Markers for Conduits: Use factory pre-printed self-adhesive vinyl, self-adhesive vinyl cloth, or vinyl snap-around type markers.

B. Minimum Size:
1. Markers for Conduits: As recommended by manufacturer for conduit size to be identified.

C. Legend:
1. Markers for Voltage Identification: Highest voltage present.

D. Color: Black text on orange background unless otherwise indicated.

2.05 WARNING SIGNS AND LABELS

A. Comply with ANSI Z535.2 or ANSI Z535.4 as applicable.

B. Warning Signs:
1. Materials:
2. Minimum Size: 7 by 10 inches (178 by 254 mm) unless otherwise indicated.

C. Warning Labels:
1. Materials: Use factory pre-printed or machine-printed self-adhesive polyester or self-adhesive vinyl labels; UV, chemical, water, heat, and abrasion resistant; produced using materials recognized to UL 969.
2. Machine-Printed Labels: Use thermal transfer process printing machines and accessories recommended by label manufacturer.
3. Minimum Size: 2 by 4 inches (51 mm by 102 mm) unless otherwise indicated.

PART 3 EXECUTION

3.01 INSTALLATION

A. Install products in accordance with manufacturer's instructions.

B. Install identification products to be plainly visible for examination, adjustment, servicing, and maintenance. Unless otherwise indicated, locate products as follows:
   1. Surface-Mounted Equipment: Enclosure front.
   2. Flush-Mounted Equipment: Inside of equipment door.
   3. Free-Standing Equipment: Enclosure front; also enclosure rear for equipment with rear access.
   4. Elevated Equipment: Legible from the floor or working platform.
   5. Interior Components: Legible from the point of access.
   6. Conduits: Legible from the floor.
   7. Conductors and Cables: Legible from the point of access.
   8. Devices: Outside face of cover.

C. Install identification products centered, level, and parallel with lines of item being identified.

D. Secure nameplates to exterior surfaces of enclosures using stainless steel screws and to interior surfaces using self-adhesive backing or epoxy cement.

E. Install self-adhesive labels and markers to achieve maximum adhesion, with no bubbles or wrinkles and edges properly sealed.

F. Mark all handwritten text, where permitted, to be neat and legible.

END OF SECTION

SECTION 26 0583
WIRING CONNECTIONS

PART 1 GENERAL

1.01 SECTION INCLUDES

A. Electrical connections to equipment.

1.02 RELATED REQUIREMENTS

A. Section 26 0519 - Low-Voltage Electrical Power Conductors and Cables.

B. Section 26 0533.13 - Conduit for Electrical Systems.

C. Section 26 0533.16 - Boxes for Electrical Systems.

D. Section 26 2726 - Wiring Devices.

E. Section 26 2816.16 - Enclosed Switches.

1.03 REFERENCE STANDARDS

A. NEMA WD 1 - General Color Requirements for Wiring Devices; 1999 (Reaffirmed 2015).

B. NEMA WD 6 - Wiring Devices - Dimensional Specifications; 2016.

C. NFPA 70 - National Electrical Code; Most Recent Edition Adopted by Authority Having Jurisdiction, Including All Applicable Amendments and Supplements.

1.04 SUBMITTALS

A. See Section 01 3000 - Administrative Requirements, for submittal procedures.

B. Product Data: Provide wiring device manufacturer’s catalog information showing dimensions, configurations, and construction.

PART 2 PRODUCTS

2.01 MATERIALS

A. Cords and Caps: NEMA WD 6; match receptacle configuration at outlet provided for equipment.
   1. Colors: Conform to NEMA WD 1.
   2. Cord Construction: NFPA 70, Type SO, multiconductor flexible cord with identified equipment grounding conductor, suitable for use in damp locations.
   3. Size: Suitable for connected load of equipment, length of cord, and rating of branch circuit overcurrent protection.

B. Wiring Devices: As specified in Section 26 2726.

C. Flexible Conduit: As specified in Section 26 0533.13.

D. Wire and Cable: As specified in Section 26 0519.

E. Boxes: As specified in Section 26 0533.16.

2.02 EQUIPMENT CONNECTIONS

1. Electrical Connection: Flexible conduit.

PART 3 EXECUTION

3.01 ELECTRICAL CONNECTIONS

A. Make electrical connections in accordance with equipment manufacturer's instructions.

B. Make conduit connections to equipment using flexible conduit. Use liquidtight flexible conduit with watertight connectors in damp or wet locations.

C. Connect heat producing equipment using wire and cable with insulation suitable for temperatures encountered.

D. Provide receptacle outlet to accommodate connection with attachment plug.

E. Provide cord and cap where field-supplied attachment plug is required.

F. Install suitable strain-relief clamps and fittings for cord connections at outlet boxes and equipment connection boxes.

G. Install disconnect switches, controllers, control stations, and control devices to complete equipment wiring requirements.

H. Install terminal block jumpers to complete equipment wiring requirements.

I. Install interconnecting conduit and wiring between devices and equipment to complete equipment wiring requirements.

END OF SECTION

SECTION 26 0923
LIGHTING CONTROL DEVICES

PART 1 GENERAL

1.01 SECTION INCLUDES

A. Occupancy sensors.

1.02 RELATED REQUIREMENTS

A. Section 26 0526 - Grounding and Bonding for Electrical Systems.

B. Section 26 0529 - Hangers and Supports for Electrical Systems.

C. Section 26 0533.16 - Boxes for Electrical Systems.

D. Section 26 0553 - Identification for Electrical Systems: Identification products and requirements.

E. Section 26 2726 - Wiring Devices: Devices for manual control of lighting, including wall switches, wall dimmers, and fan speed controllers.

F. Section 26 5100 - Interior Lighting.

1.03 REFERENCE STANDARDS

A. NECA 1 - Standard for Good Workmanship in Electrical Construction; 2015.

B. NECA 130 - Standard for Installing and Maintaining Wiring Devices; 2010.

C. NFPA 70 - National Electrical Code; Most Recent Edition Adopted by Authority Having Jurisdiction, Including All Applicable Amendments and Supplements.

D. UL 1472 - Solid-State Dimming Controls; Current Edition, Including All Revisions.

1.04 SUBMITTALS

A. See Section 01 3000 - Administrative Requirements, for submittal procedures.

B. Product Data: Include ratings, configurations, standard wiring diagrams, dimensions, colors, service condition requirements, and installed features.
   1. Occupancy Sensors: Include detailed motion detection coverage range diagrams.

1.05 QUALITY ASSURANCE

A. Conform to requirements of NFPA 70.

PART 2 PRODUCTS

2.01 LIGHTING CONTROL DEVICES - GENERAL REQUIREMENTS

A. Provide products listed, classified, and labeled as suitable for the purpose intended.

B. Unless specifically indicated to be excluded, provide all required conduit, wiring, connectors, hardware, components, accessories, etc. as required for a complete operating system.

2.02 OCCUPANCY SENSORS

A. Manufacturers:
   1. Hubbell Incorporated; www.hubbell.com/#sle.
   2. Lutron Electronics Company, Inc; www.lutron.com/sle.
   3. Sensor Switch Inc; www.sensorswitch.com.
   4. WattStopper; www.wattstopper.com.

B. All Occupancy Sensors:
   1. Description: Factory-assembled commercial specification grade devices for indoor use capable of sensing both major motion, such as walking, and minor motion, such as small desktop level movements, according to published coverage areas, for automatic control of load indicated.
   2. Sensor Technology:
      a. Passive Infrared (PIR) Occupancy Sensors: Designed to detect occupancy by sensing movement of thermal energy between zones.

b. Ultrasonic Occupancy Sensors: Designed to detect occupancy by sensing frequency shifts in emitted and reflected inaudible sound waves.
c. Passive Infrared/Ultrasonic Dual Technology Occupancy Sensors: Designed to detect occupancy using a combination of both passive infrared and ultrasonic technologies.
d. Passive Infrared/Acoustic Dual Technology Occupancy Sensors: Designed to detect occupancy using a combination of both passive infrared and audible sound sensing technologies.

3. Provide LED to visually indicate motion detection with separate color LEDs for each sensor type in dual technology units.
4. Operation: Unless otherwise indicated, occupancy sensor to turn load on when occupant presence is detected and to turn load off when no occupant presence is detected during an adjustable turn-off delay time interval.
5. Turn-Off Delay: Field adjustable, with time delay settings up to 30 minutes.
6. Adaptive Technology: Field selectable; capable of self-adjusting sensitivity and time delay according to conditions.
7. Compatibility (Non-Dimming Sensors): Suitable for controlling incandescent lighting, low-voltage lighting with electronic and magnetic transformers, fluorescent lighting with electronic and magnetic ballasts, and fractional motor loads, with no minimum load requirements.
8. Load Rating for Line Voltage Occupancy Sensors: As required to control the load indicated on the drawings.

C. Wall Switch Occupancy Sensors:
1. All Wall Switch Occupancy Sensors:
a. Description: Occupancy sensors designed for installation in standard wall box at standard wall switch mounting height with a field of view of 180 degrees, integrated manual control capability, and no leakage current to load in off mode.
b. Manual-Off Override Control: When used to turn off load while in automatic-on mode, unit to revert back to automatic mode after no occupant presence is detected during the delayed-off time interval.

D. Wall Dimmer Occupancy Sensors:
1. General Requirements:
a. Description: Occupancy sensors designed for installation in standard wall box at standard wall switch mounting height with a field of view of 180 degrees, integrated dimming control capability , and no leakage current to load in off mode.
b. Dimmer: Solid-state with continuous full-range even control following square law dimming curve, integral radio frequency interference filtering, power failure preset memory, air gap switch accessible without removing wall plate, and listed as complying with UL 1472; type and rating suitable for load controlled.
2. Passive Infrared (PIR) Wall Dimmer Occupancy Sensors: Capable of detecting motion within an area of 900 square feet (83.6 sq m).
a. Products:
1) As indicated on drawings..

E. Ceiling Mounted Occupancy Sensors:
1. All Ceiling Mounted Occupancy Sensors:
a. Description: Low profile occupancy sensors designed for ceiling installation.
2. Passive Infrared (PIR) Ceiling Mounted Occupancy Sensors:
a. Standard Range Sensors: Capable of detecting motion within an area of 450 square feet (41.8 square meters) at a mounting height of 9 feet (2.7 m), with a field of view of 360 degrees.
1) Products:
(a) Lutron LOS-CIR Series; www.lutron.com/sle.
3. Passive Infrared/Ultrasonic Dual Technology Ceiling Mounted Occupancy Sensors:

a. Standard Range Sensors: Capable of detecting motion within an area of 450 square feet (41.8 sq m) at a mounting height of 9 feet (2.7 m), with a field of view of 360 degrees.
   1) Products:
      (a) Lutron LOS-CDT Series; www.lutron.com/sle.

PART 3 EXECUTION

3.01 INSTALLATION

A. Install lighting control devices in accordance with NECA 1 (general workmanship) and, where applicable, NECA 130, including mounting heights specified in those standards unless otherwise indicated.

B. Coordinate locations of outlet boxes provided under Section 26 0533.16 as required for installation of lighting control devices provided under this section.

C. Install lighting control devices in accordance with manufacturer's instructions.

D. Unless otherwise indicated, connect lighting control device grounding terminal or conductor to branch circuit equipment grounding conductor and to outlet box with bonding jumper.

E. Install lighting control devices plumb and level, and held securely in place.

F. Where required and not furnished with lighting control device, provide wall plate in accordance with Section 26 2726.

G. Provide required supports in accordance with Section 26 0529.

H. Where applicable, install lighting control devices and associated wall plates to fit completely flush to mounting surface with no gaps and rough opening completely covered without strain on wall plate. Repair or reinstall improperly installed outlet boxes or improperly sized rough openings. Do not use oversized wall plates in lieu of meeting this requirement.

I. Occupancy Sensor Locations:
   1. Locate ultrasonic and dual technology passive infrared/ultrasonic occupancy sensors a minimum of 4 feet (1.2 m) from air supply ducts or other sources of heavy air flow and as per manufacturer's recommendations, in order to minimize false triggers.

3.02 ADJUSTING

A. Adjust devices and wall plates to be flush and level.

B. Adjust occupancy sensor settings to minimize undesired activations while optimizing energy savings, and to achieve desired function as indicated or as directed by Architect.

C. Where indicated or as directed by Architect, install factory masking material or adjust integral blinders on passive infrared (PIR) and dual technology occupancy sensor lenses to block undesired motion detection.

END OF SECTION

SECTION 26 2726
WIRING DEVICES

PART 1 GENERAL

1.01 SECTION INCLUDES

A. Wall switches.

B. Wall dimmers.

C. Receptacles.

D. Wall plates.

1.02 RELATED REQUIREMENTS

A. Section 26 0519 - Low-Voltage Electrical Power Conductors and Cables: Manufactured wiring systems for use with access floor boxes with compatible pre-wired connectors.

B. Section 26 0526 - Grounding and Bonding for Electrical Systems.

C. Section 26 0533.16 - Boxes for Electrical Systems.

D. Section 26 0553 - Identification for Electrical Systems: Identification products and requirements.

E. Section 26 0583 - Wiring Connections: Cords and plugs for equipment.

F. Section 26 0923 - Lighting Control Devices: Devices for automatic control of lighting, including occupancy sensors, in-wall time switches, and in-wall interval timers.

1.03 REFERENCE STANDARDS

A. FS W-C-596 - Connector, Electrical, Power, General Specification for; Revision H, 2014.

B. FS W-S-896 - Switches, Toggle (Toggle and Lock), Flush-mounted (General Specification); Revision G, 2014.

C. NECA 1 - Standard for Good Workmanship in Electrical Construction; 2015.

D. NECA 130 - Standard for Installing and Maintaining Wiring Devices; 2010.

E. NEMA WD 1 - General Color Requirements for Wiring Devices; 1999 (Reaffirmed 2015).

F. NEMA WD 6 - Wiring Devices - Dimensional Specifications; 2016.

G. NFPA 70 - National Electrical Code; Most Recent Edition Adopted by Authority Having Jurisdiction, Including All Applicable Amendments and Supplements.

H. UL 20 - General-Use Snap Switches; Current Edition, Including All Revisions.

I. UL 498 - Attachment Plugs and Receptacles; Current Edition, Including All Revisions.

J. UL 514D - Cover Plates for Flush-Mounted Wiring Devices; Current Edition, Including All Revisions.

K. UL 1472 - Solid-State Dimming Controls; Current Edition, Including All Revisions.

1.04 SUBMITTALS

A. See Section 01 3000 - Administrative Requirements, for submittal procedures.

B. Product Data: Provide manufacturer's catalog information showing dimensions, colors, and configurations.

1.05 QUALITY ASSURANCE

A. Conform to requirements of NFPA 70.

B. Products: Listed, classified, and labeled as suitable for the purpose intended.

PART 2 PRODUCTS

2.01 WIRING DEVICE APPLICATIONS

A. Provide wiring devices suitable for intended use and with ratings adequate for load served.

2.02 WIRING DEVICE FINISHES

A. Provide wiring device finishes as described below unless otherwise indicated.

B. Wiring Devices, Unless Otherwise Indicated: White with stainless steel wall plate.

2.03 WALL SWITCHES

A. Wall Switches - General Requirements: AC only, quiet operating, general-use snap switches with silver alloy contacts, complying with NEMA WD 1 and NEMA WD 6, and listed as complying with UL 20 and where applicable, FS W-S-896; types as indicated on the drawings.
   1. Wiring Provisions: Terminal screws for side wiring and screw actuated binding clamp for back wiring with separate ground terminal screw.

2.04 RECEPTACLES

A. Receptacles - General Requirements: Self-grounding, complying with NEMA WD 1 and NEMA WD 6, and listed as complying with UL 498, and where applicable, FS W-C-596; types as indicated on the drawings.
   1. Wiring Provisions: Terminal screws for side wiring or screw actuated binding clamp for back wiring with separate ground terminal screw.
   2. NEMA configurations specified are according to NEMA WD 6.

2.05 WALL PLATES

A. Wall Plates: Comply with UL 514D.
   1. Configuration: One piece cover as required for quantity and types of corresponding wiring devices.
   2. Size: Standard.
   3. Screws: Metal with slotted heads finished to match wall plate finish.

PART 3 EXECUTION

3.01 INSTALLATION

A. Perform work in accordance with NECA 1 (general workmanship) and, where applicable, NECA 130, including mounting heights specified in those standards unless otherwise indicated.

B. Coordinate locations of outlet boxes provided under Section 26 0533.16 as required for installation of wiring devices provided under this section.

C. Install wiring devices in accordance with manufacturer's instructions.

D. Install permanent barrier between ganged wiring devices when voltage between adjacent devices exceeds 300 V.

E. Where required, connect wiring devices using pigtails not less than 6 inches (150 mm) long. Do not connect more than one conductor to wiring device terminals.

F. Connect wiring devices by wrapping conductor clockwise 3/4 turn around screw terminal and tightening to proper torque specified by the manufacturer. Where present, do not use push-in pressure terminals that do not rely on screw-actuated binding.

G. Unless otherwise indicated, connect wiring device grounding terminal to branch circuit equipment grounding conductor and to outlet box with bonding jumper.

H. Install wiring devices plumb and level with mounting yoke held rigidly in place.

I. Install wall switches with OFF position down.

J. Install vertically mounted receptacles with grounding pole on top and horizontally mounted receptacles with grounding pole on left.

K. Install wall plates to fit completely flush to wall with no gaps and rough opening completely covered without strain on wall plate. Repair or reinstall improperly installed outlet boxes or improperly sized rough openings. Do not use oversized wall plates in lieu of meeting this requirement.

L. Install blank wall plates on junction boxes and on outlet boxes with no wiring devices installed or designated for future use.

END OF SECTION

SECTION 26 2816.13
ENCLOSED CIRCUIT BREAKERS

PART 1 GENERAL

1.01 SECTION INCLUDES

A. Enclosed circuit breakers.

1.02 RELATED REQUIREMENTS

A. Section 26 0526 - Grounding and Bonding for Electrical Systems.

B. Section 26 0529 - Hangers and Supports for Electrical Systems.

C. Section 26 0553 - Identification for Electrical Systems: Identification products and requirements.

1.03 REFERENCE STANDARDS

A. NECA 1 - Standard for Good Workmanship in Electrical Construction; 2015.

B. NEMA 250 - Enclosures for Electrical Equipment (1000 Volts Maximum); 2014.

C. NFPA 70 - National Electrical Code; Most Recent Edition Adopted by Authority Having Jurisdiction, Including All Applicable Amendments and Supplements.

D. UL 50 - Enclosures for Electrical Equipment, Non-Environmental Considerations; Current Edition, Including All Revisions.

E. UL 50E - Enclosures for Electrical Equipment, Environmental Considerations; Current Edition, Including All Revisions.

F. UL 489 - Molded-Case Circuit Breakers, Molded-Case Switches and Circuit Breaker Enclosures; Current Edition, Including All Revisions.

1.04 SUBMITTALS

A. See Section 01 3000 - Administrative Requirements, for submittal procedures.

B. Product Data: Provide manufacturer's standard catalog pages and data sheets for circuit breakers, enclosures, and other installed components and accessories.

PART 2 PRODUCTS

2.01 MANUFACTURERS

A. Eaton Corporation; www.eaton.com.

B. General Electric Company; www.geindustrial.com.

C. Schneider Electric; Square D Products; www.schneider-electric.us.

D. Siemens Industry, Inc; www.usa.siemens.com.

2.02 ENCLOSED CIRCUIT BREAKERS

A. Description: Units consisting of molded case circuit breakers individually mounted in enclosures.

B. Provide products listed, classified, and labeled as suitable for the purpose intended.

C. Unless otherwise indicated, provide products suitable for continuous operation under the following service conditions:
   1. Altitude: Less than 6,600 feet (2,000 m).

D. Short Circuit Current Rating:

E. Conductor Terminations: Suitable for use with the conductors to be installed.

F. Provide solidly bonded equipment ground bus in each enclosed circuit breaker, with a suitable lug for terminating each equipment grounding conductor.

G. Enclosures: Comply with NEMA 250, and list and label as complying with UL 50 and UL 50E.
   1. Environment Type per NEMA 250: Unless otherwise indicated, as specified for the following installation locations:

a. Indoor Clean, Dry Locations: Type 1.
b. Outdoor Locations: Type 3R.

H. Provide externally operable handle with means for locking in the OFF position.

2.03 MOLDED CASE CIRCUIT BREAKERS

A. Description: Quick-make, quick-break, over center toggle, trip-free, trip-indicating circuit breakers listed and labeled as complying with UL 489, and complying with FS W-C-375 where applicable; ratings, configurations, and features as indicated on the drawings.

B. Interrupting Capacity:
1. Provide circuit breakers with interrupting capacity as required to provide the short circuit current rating indicated, but not less than:
2. Fully Rated Systems: Provide circuit breakers with interrupting capacity not less than the short circuit current rating indicated.

C. Conductor Terminations:
1. Lug Material: Aluminum, suitable for terminating aluminum or copper conductors.

D. Multi-Pole Circuit Breakers: Furnish with common trip for all poles.

PART 3 EXECUTION

3.01 INSTALLATION

A. Install products in accordance with manufacturer's instructions.

B. Perform work in accordance with NECA 1 (general workmanship).

C. Arrange equipment to provide minimum clearances in accordance with manufacturer's instructions and NFPA 70.

D. Provide required supports in accordance with Section 26 0529.

E. Install enclosed circuit breakers plumb.

F. Except where indicated to be mounted adjacent to the equipment they supply, mount enclosed circuit breakers such that the highest position of the operating handle does not exceed 79 inches (2000 mm) above the floor or working platform.

G. Provide grounding and bonding in accordance with Section 26 0526.

END OF SECTION

SECTION 26 5100
INTERIOR LIGHTING

PART 1 GENERAL

1.01 SECTION INCLUDES

A. Interior luminaires.

B. Emergency lighting units.

C. Exit signs.

1.02 RELATED REQUIREMENTS

A. Section 26 0533.16 - Boxes for Electrical Systems.

B. Section 26 0553 - Identification for Electrical Systems: Identification products and requirements.

C. Section 26 0923 - Lighting Control Devices: Automatic controls for lighting including occupancy sensors, outdoor motion sensors, time switches, outdoor photo controls, and daylighting controls.

1.03 REFERENCE STANDARDS

A. IES LM-79 - Approved Method: Electrical and Photometric Measurements of Solid-State Lighting Products; 2008.

B. IES LM-80 - Approved Method: Measuring Luminous Flux and Color Maintenance of LED Packages, Arrays, and Modules; 2015, with Errata (2017).

C. NECA 1 - Standard for Good Workmanship in Electrical Construction; 2015.

D. NECA/IESNA 500 - Standard for Installing Indoor Commercial Lighting Systems; 2006.

E. NECA/IESNA 502 - Standard for Installing Industrial Lighting Systems; 2006.

F. NFPA 70 - National Electrical Code; Most Recent Edition Adopted by Authority Having Jurisdiction, Including All Applicable Amendments and Supplements.

G. NFPA 101 - Life Safety Code; 2015.

H. UL 924 - Emergency Lighting and Power Equipment; Current Edition, Including All Revisions.

I. UL 1598 - Luminaires; Current Edition, Including All Revisions.

J. UL 8750 - Light Emitting Diode (LED) Equipment for Use in Lighting Products; Current Edition, Including All Revisions.

1.04 SUBMITTALS

A. See Section 01 3000 - Administrative Requirements, for submittal procedures.

B. Product Data: Provide manufacturer's standard catalog pages and data sheets including detailed information on luminaire construction, dimensions, ratings, finishes, mounting requirements, listings, service conditions, photometric performance, installed accessories, and ceiling compatibility; include model number nomenclature clearly marked with all proposed features.

1. LED Luminaires:

a. Include estimated useful life, calculated based on IES LM-80 test data.

1.05 WARRANTY

A. See Section 01 7800 - Closeout Submittals, for additional warranty requirements.

B. Provide three year manufacturer warranty for all LED luminaires, including drivers.

C. Provide five year pro-rata warranty for batteries for emergency lighting units.

PART 2 PRODUCTS

2.01 LUMINAIRE TYPES

A. Furnish products as indicated in luminaire schedule included on the drawings.

B. Substitutions: See Section 01 6000 - Product Requirements, except where individual luminaire types are designated with substitutions not permitted.

2.02 LUMINAIRES

A. Provide products that comply with requirements of NFPA 70.

B. Provide products that are listed and labeled as complying with UL 1598, where applicable.

C. Provide products listed, classified, and labeled as suitable for the purpose intended.

D. Unless otherwise indicated, provide complete luminaires including lamp(s) and all sockets, ballasts, reflectors, lenses, housings and other components required to position, energize and protect the lamp and distribute the light.

E. Unless specifically indicated to be excluded, provide all required conduit, boxes, wiring, connectors, hardware, supports, trims, accessories, etc. as necessary for a complete operating system.

F. Provide products suitable to withstand normal handling, installation, and service without any damage, distortion, corrosion, fading, discoloring, etc.

G. LED Luminaires:
   1. Components: UL 8750 recognized or listed as applicable.
   2. Tested in accordance with IES LM-79 and IES LM-80.
   3. LED Estimated Useful Life: Minimum of 50,000 hours at 70 percent lumen maintenance, calculated based on IES LM-80 test data.

2.03 EMERGENCY LIGHTING UNITS

A. Description: Emergency lighting units complying with NFPA 101 and all applicable state and local codes, and listed and labeled as complying with UL 924.

B. Operation: Upon interruption of normal power source or brownout condition exceeding 20 percent voltage drop from nominal, solid-state control automatically switches connected lamps to integral battery power for minimum of 90 minutes of rated emergency illumination, and automatically recharges battery upon restoration of normal power source.

C. Battery:
   1. Size battery to supply all connected lamps, including emergency remote heads where indicated.

D. Diagnostics: Provide power status indicator light and accessible integral test switch to manually activate emergency operation.

E. Provide low-voltage disconnect to prevent battery damage from deep discharge.

2.04 EXIT SIGNS

A. Description: Internally illuminated exit signs with LEDs unless otherwise indicated; complying with NFPA 101 and all applicable state and local codes, and listed and labeled as complying with UL 924.
   1. Number of Faces: Single or double as indicated or as required for the installed location.
   2. Directional Arrows: As indicated or as required for the installed location.

PART 3 EXECUTION

3.01 INSTALLATION

A. Coordinate locations of outlet boxes provided under Section 26 0533.16 as required for installation of luminaires provided under this section.

B. Perform work in accordance with NECA 1 (general workmanship).

C. Install products in accordance with manufacturer's instructions.

D. Install luminaires securely, in a neat and workmanlike manner, as specified in NECA 500 (commercial lighting) and NECA 502 (industrial lighting).

E. Install luminaires plumb and square and aligned with building lines and with adjacent luminaires.

F. Install accessories furnished with each luminaire.

G. Bond products and metal accessories to branch circuit equipment grounding conductor.

H. Emergency Lighting Units:

I. Exit Signs:

J. Install lamps in each luminaire.

3.02 FIELD QUALITY CONTROL

A. See Section 01 4000 - Quality Requirements, for additional requirements.

B. Inspect each product for damage and defects.

C. Operate each luminaire after installation and connection to verify proper operation.

D. Test self-powered exit signs, emergency lighting units, and fluorescent emergency power supply units to verify proper operation upon loss of normal power supply.

E. Correct wiring deficiencies and repair or replace damaged or defective products. Repair or replace excessively noisy ballasts as determined by Architect.

3.03 CLOSEOUT ACTIVITIES

A. See Section 01 7800 - Closeout Submittals, for closeout submittals.

END OF SECTION

SECTION 28 2000
VIDEO SURVEILLANCE

PART 1 GENERAL

1.01 SECTION INCLUDES

A. Video surveillance system requirements.

B. Video recording and viewing equipment.

C. Cameras.

D. Accessories.

1.02 RELATED REQUIREMENTS

A. Section 26 0526 - Grounding and Bonding for Electrical Systems.

B. Section 26 0529 - Hangers and Supports for Electrical Systems.

C. Section 26 0533.13 - Conduit for Electrical Systems.

D. Section 26 0553 - Identification for Electrical Systems: Identification products and requirements.

1.03 REFERENCE STANDARDS

A. 47 CFR 15 - Radio Frequency Devices; current edition.

B. NECA 1 - Standard for Good Workmanship in Electrical Construction; 2015.

C. NECA 303 - Standard for Installing Closed-Circuit Television (CCTV) Systems; 2005.

D. NFPA 70 - National Electrical Code; Most Recent Edition Adopted by Authority Having Jurisdiction, Including All Applicable Amendments and Supplements.

1.04 SUBMITTALS

A. See Section 01 3000 - Administrative Requirements, for submittal procedures.

B. Shop Drawings: Include plan views indicating locations of system components and proposed size, type, and routing of conduits and/or cables. Include elevations and details of proposed equipment arrangements. Include system interconnection schematic diagrams. Include requirements for interface with other systems.

C. Product Data: Provide manufacturer's standard catalog pages and data sheets for each system component. Include ratings, configurations, standard wiring diagrams, dimensions, finishes, service condition requirements, and installed features.

D. Design Data:
   1. Standby battery/UPS calculations.
   2. Video storage capacity calculations.

E. Certify that proposed system design and components meet or exceed specified requirements.

F. Evidence of qualifications for installer.

G. Evidence of qualifications for maintenance contractor (if different entity from installer).

H. Manufacturer's Installation Instructions: Indicate application conditions and limitations of use stipulated by product testing agency. Include instructions for storage, handling, protection, examination, preparation, installation, and operation of product.

I. Warranty: Submit sample of manufacturer's warranty and documentation of final executed warranty completed in Owner's name and registered with manufacturer.

1.05 QUALITY ASSURANCE

A. Comply with the following:
   1. NFPA 70.
   2. Applicable TIA/EIA standards.

1.06 WARRANTY

A. See Section 01 7800 - Closeout Submittals, for additional warranty requirements.

PART 2 PRODUCTS

2.01 MANUFACTURERS

A. Video Recording and Viewing Equipment:
   1. Bosch Security Systems; www.boschsecurity.us.
   2. Honeywell International, Inc; www.honeywellvideo.com.
   3. Pelco, a brand of Schneider Electric; www.pelco.com.

B. Cameras - Basis of Design: Axis Communications as indicated under product descriptions below: www.axis.com/#sle.

C. Cameras - Other Acceptable Manufacturers:
   1. Axis Communications; www.axis.com/#sle.
   2. Bosch Security Systems; www.boschsecurity.us.
   3. Honeywell International, Inc; www.honeywellvideo.com.
   4. Pelco, a brand of Schneider Electric; www.pelco.com.

D. Products other than basis of design are subject to compliance with specified requirements and prior approval of Engineer. By using products other than basis of design, Contractor accepts responsibility for costs associated with any necessary modifications to related work, including any design fees.

2.02 VIDEO SURVEILLANCE SYSTEM

A. Provide new video surveillance system consisting of all required equipment, conduit, boxes, wiring, connectors, hardware, supports, accessories, software, system programming, etc. as necessary for a complete operating system that provides the functional intent indicated.

B. System Description: IP system with connection to network (IP) cameras.
   1. System Battery Backup: Provide batteries/uninterruptible power supplies (UPS) as required for 60 minutes full operation.

C. Cameras Required:
   1. See article "CAMERAS" below for product descriptions.

D. Provide products listed, classified, and labeled as suitable for the purpose intended.

E. Electromagnetic Interference/Radio Frequency Interference (EMI/RFI) Limits: Comply with FCC requirements of 47 CFR 15, for Class B, consumer application.

2.03 VIDEO RECORDING AND VIEWING EQUIPMENT

A. Provide video recording and viewing equipment compatible with cameras to be connected.

B. Network Video Recorders (NVRs):
   1. Supports connection of network (IP) cameras.
   2. Supports continuous and event-based recording.

2.04 CAMERAS

A. Provide cameras and associated accessories suitable for operation under the service conditions at the installed location. Provide additional components (e.g. enclosures, heaters, blowers, etc.) as required.

B. Where not factory-installed, provide additional components (e.g. lenses, mounting accessories, etc.) as necessary for complete installation.

C. Network (IP) Cameras:
   1. Signal-to-Noise Ratio: Not less than 50 dB.
   2. Provide the following standard features:
      a. Automatic electronic shutter.
      b. Automatic gain control.
      c. Automatic white balance.

d. Web-based interface for remote viewing and setup.
e. Password protected security access.

D. Camera Enclosures and Mounting Brackets:
1. Where not factory-installed, provide accessory camera enclosures suitable for operation under the service conditions at the installed location.
2. Where not factory-installed, provide accessory camera mounting brackets necessary for installation.

2.05 ACCESSORIES

A. Provide components as indicated or as required for connection of video surveillance system to devices and other systems indicated.

B. Provide network switches as required for network connections to system components.

C. Provide cables as indicated or as required for connections between system components.

D. Provide accessory racks/cabinets as indicated or as required for equipment mounting.

PART 3 EXECUTION

3.01 INSTALLATION

A. Install video surveillance system in accordance with NECA 1 (general workmanship) and NECA 303.

B. Provide required support and attachment in accordance with Section 26 0529.

C. Wiring Method: Unless otherwise indicated, use cables (not in conduit).
1. Use suitable listed cables in wet locations, including underground raceways.
2. Use suitable listed cables for vertical riser applications.
3. Use listed plenum rated cables in spaces used for environmental air.
4. Conceal all cables unless specifically indicated to be exposed.
5. Route exposed cables parallel or perpendicular to building structural members and surfaces.

D. Provide grounding and bonding in accordance with Section 26 0526.

E. Identify system wiring and components in accordance with Section 26 0553.

END OF SECTION

CITY OF LAS VEGAS, NM

UTILITIES OFFICE BUILDING RENOVATION - PHASE I

1401 1ST STREET, LAS VEGAS, NEW MEXICO 87701

FINAL 10/08/2018

VICINTIY MAP

N

INDEX OF DRAWINGS

G-001	COVER SHEET, INDEX OF DRAWINGS & MAPS
G-002	CODE ANALYSIS, LIFE SAFETY PLAN & ADA DETAILS
A-101	DEMOLITION & NEW FLOOR PLANS,WALL TYPES
A-102	DEMOLITION & NEW REFLECTED CEILING PLANS
A-103	DEMOLITION ROOF & NEW ROOF PLANS
A-401	ENLARGED FLOOR PLANS, DOOR & WINDOW DETAILS, STRUCTURAL DETAILS
A-402	INTERIOR ELEVATIONS
A-601	DOOR, WINDOW & FINISH SCHEDULES
S-101	SECTIONS AND DETAILS
M-001	MECHANICAL LEGENDS & GENERAL NOTES
M-101	DEMOLITION AND NEW MECHANICAL PLANS
M-501	MECHANICAL DETAILS
M-601	MECHANICAL SCHEDULES
P-001	PLUMBING LEGENDS & GENERAL NOTES
P-101	PLUMBING PLAN & ENLARGED PLUMBING PLANS
P-102	PLUMBING PLAN - CONDENSATE PIPING
P-501	PLUMBING DETAILS
P-601	PLUMBING SCHEDULES
E-001	ELECTRICAL LEGEND, ABBREVIATIONS & GENERAL NOTES
ES101	ELECTRICAL SITE PLAN
E-101	ELECTRICAL LIGHTING PLAN
E-102	ELECTRICAL POWER/SPECIAL SYSTEMS PLAN
E-501	ELECTRICAL DETAILS
E-601	ELECTRICAL DIAGRAMS & SCHEDULES

ADDITIVE ALTERNATES

1. PROVIDE ALL NEW FINISHES IN ROOMS 115, 116 & 117 INCLUDING NEW LED LIGHTING
2. PROVIDE ALL NEW FINISHES IN ROOMS 106, 107 & 108 INCLUDING NEW LED LIGHTING

LOCATION MAP

N

FINAL

WHPacific
6501 Americas Pkwy NE, Suite 400
Albuquerque, NM 87110
505.247.0294 Fax 505.242.4845
www.whpacific.com

REVISIONS & ADDENDUMS		
#	DATE	REMARKS

DRAWING INFO.	
DESIGNED	PWB
DRAWN	EJ
CHECKED	PWB
APPROVED	
LAST EDIT	
PLOT DATE	
SUBMITTAL	10/08/2018

COVER SHEET, INDEX OF DRAWINGS & MAPS

CITY OF LAS VEGAS, NEW MEXICO
UTILITIES OFFICE BUILDING RENOVATION - PHASE I

DRAWING SCALE
AS NOTED

PROJECT NUMBER
P0020657W.1

DRAWING FILE NAME
P0020657W.1-G-001.DWG

SHEET NUMBER
G-001

CODE CRITERIA

2015 INTERNATIONAL BUILDING CODE
2015 INTERNATIONAL EXISTING BUILDING CODE
2009 UNIFORM PLUMBING CODE
2009 NM PLUMBING & MECHANICAL CODE
2015 UNIFORM MECHANICAL CODE
2014 NATIONAL ELECTRIC CODE
2009 ANSI AMERICAN NATIONAL STANDARDS

CODE ANALYSIS: UTILITIES OFFICE BUILDING

1. **CONSTRUCTION: TYPE II B**
   - 1.1. FIRE RESISTANCE RATING REQUIREMENTS FOR BUILDING ELEMENTS PER IBC TABLE 601
   - 1.2. NO FIRE RESISTANCE RATING REQUIRED FOR EXTERIOR WALLS. ALL WALLS HAVE FIRE SEPARATION DISTANCE GREATER THAN 30'-0" PER IBC TABLE 602
   - 1.3. OPENINGS IN EXTERIOR WALLS DO NOT REQUIRE PROTECTION AND ALLOWABLE AREA OF OPENINGS IS UNLIMITED. THE BUILDING HAS FIRE SEPARATION DISTANCE IN EXCESS OF 30'-0" ON ALL SIDES. IBC TABLE 705.8
   - 1.4. FIRE RESISTANCE RATING OF EXIT ACCESS CORRIDORS IS NOT REQUIRED FOR GROUP B OCCUPANCY IN BUILDING PER IBC TABLE 1020, EXCEPTION 4.
2. **OCCUPANCY GROUP:** GROUP B (BUSINESS)
   ALLOWABLE BUILDING HEIGHT AND AREA: CONSTRUCTION TYPE: II-B
   TABLE 504.4 GROUP B - 4 STORIES - 55 FEET ALLOWED; 1 STORY - 21 FEET PROVIDED
   TABLE 506.2 (NON-SPRINKLERED) 23,000 SQUARE FEET ALLOWED; 4784 SQUARE FEET PROVIDED
   CALCULATED OCCUPANCY: 48 PERSONS
3. **EXIT ACCESS TRAVEL DISTANCE:** (WITHOUT SPRINKLER SYSTEM)
   - 3.1. PER IBC TABLE 1006.2.1 AND 1017.2: GROUP B = LESS THAN 200 FEET REQUIRED; LESS THAN 71 FEET PROVIDED
   EGRESS WIDTH:
   - 3.1. 1 EXIT AND .2" PER OCCUPANT SERVED = MINIMUM 9.6" REQUIRED; 2 EXITS AT 72" PROVIDED (1 AT FRONTAGE ENTRY, 1 AT REAR PARKING AREA)
   - 3.2. DOOR WIDTH: MINIMUM 32" CLEAR
   - 3.3. CORRIDOR WIDTH: LESS THAN 50 OCCUPANTS = 36" REQUIRED; MINIMUM 47" PROVIDED
4. **NUMBER OF REQUIRED EXITS:**
5. MINIMUM OF 1 EXIT IS REQUIRED FROM GROUP B SPACES THAT DO NOT EXCEED 49 OCCUPANTS AND HAVE LESS THAN 75' OF TRAVEL DISTANCE PER IBC TABLE 1006.2.1
6. **FINISHES:**
   - 6.1. GROUP B EXIT ENCLOSURES-CLASS B
   - 6.2. GROUP B CORRIDORS AND ENCLOSED SPACES- CLASS C
   - 6.3. 10% OF AGGREGATE WALL AND CEILING AREA MAY BE FLAME RESISTANT DECORATIVE MATERIALS
7. **PLUMBING:** BASED ON REQUIREMENTS PER IBC CHAPTER 29 FOR B OCCUPANCY

	UNITS REQUIRED	UNITS PROVIDED
WATER CLOSETS	2	3
LAVATORIES	2	3
DRINKING FOUNTAINS	1	1
SERVICE SINK(S)	1	1

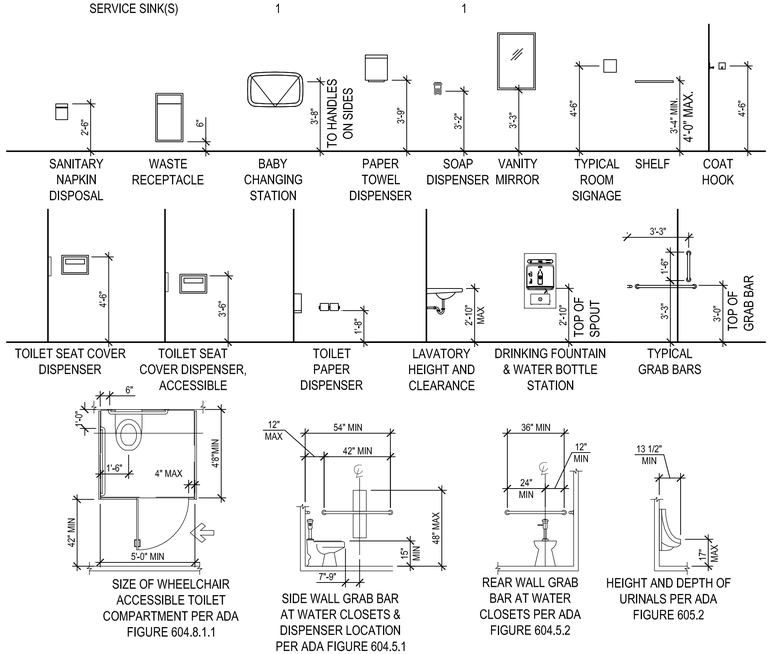

A1 TYPICAL ADA DETAILS
NOT TO SCALE

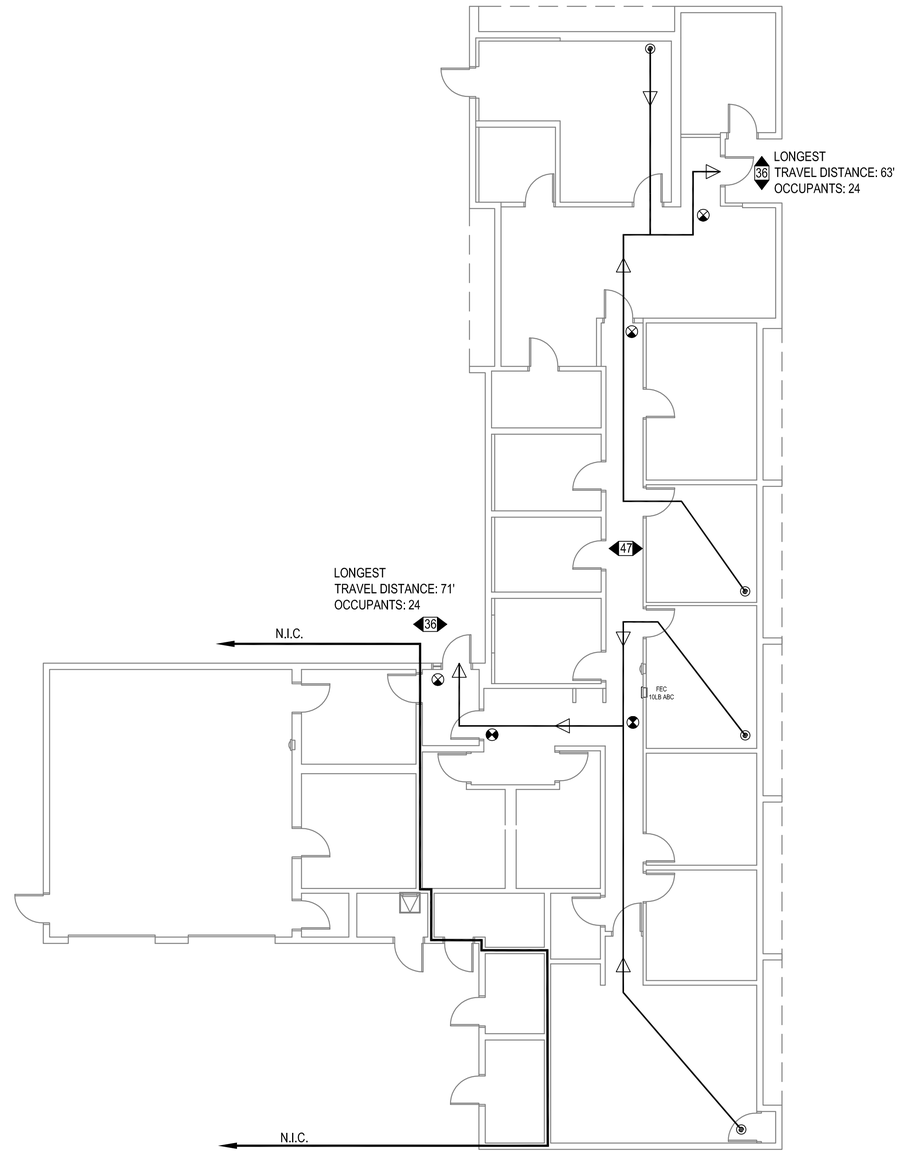

A2 LIFE SAFETY PLAN
SCALE: 1/8"=1'-0"

GENERAL NOTES

A. CONTRACTOR TO FIELD VERIFY ALL EXISTING CONDITIONS AND DIMENSIONS PRIOR TO START OF WORK. RECORD, DOCUMENT AND REPORT ANY CONDITIONS THAT VARY FROM DRAWINGS TO ARCHITECT.

LEGEND

EGRESS PATH
EGRESS WIDTH
EGRESS POINT OF ORIGIN
DIRECTION OF EGRESS
NEW EMERGENCY EXIT SIGN
SEMI-RECESSED FIRE EXTINGUISHER CABINET/ TYPE (MIN. 5LB 'ABC' & 5LB CLASS 'K' NEAR KITCHEN)

N

0 4' 8' 16'
SCALE:1/8"=1'

FINAL

WHPacific
6501 Americas Pkwy NE, Suite 400
Albuquerque, NM 87110
505.247.0294 Fax 505.242.4845
www.whpacific.com

STATE OF NEW MEXICO
PAUL M. BROWNE
10426
REGISTERED ARCHITECT
6-29-18

REVISIONS & ADDENDUMS		
#	DATE	REMARKS

DRAWING INFO.	
DESIGNED	PWB
DRAWN	EJ
CHECKED	PWB
APPROVED	
LAST EDIT	
PLOT DATE	
SUBMITTAL	6/29/18

CODE ANALYSIS, LIFE SAFETY PLAN & ADA DETAILS

CITY OF LAS VEGAS, NEW MEXICO
UTILITIES OFFICE BUILDING RENOVATION - PHASE I

DRAWING SCALE: AS NOTED

PROJECT NUMBER: P0020657W.1
DRAWING FILE NAME: P0020657W.1-G-002.DWG

SHEET NUMBER
G-002

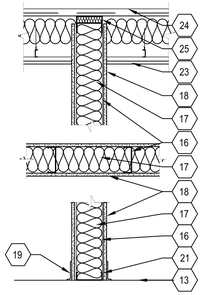

D1 WALL TYPE A - 6" STUD
SCALE: 3/4" = 1'-0"

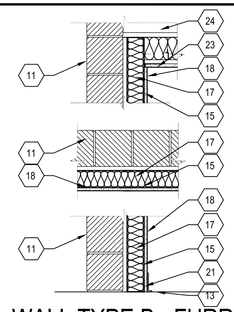

D2 WALL TYPE B - FURRED
SCALE: 3/4" = 1'-0"

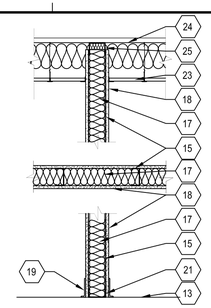

D3 WALL TYPE C - 3 5/8" STUD
SCALE: 3/4" = 1'-0"

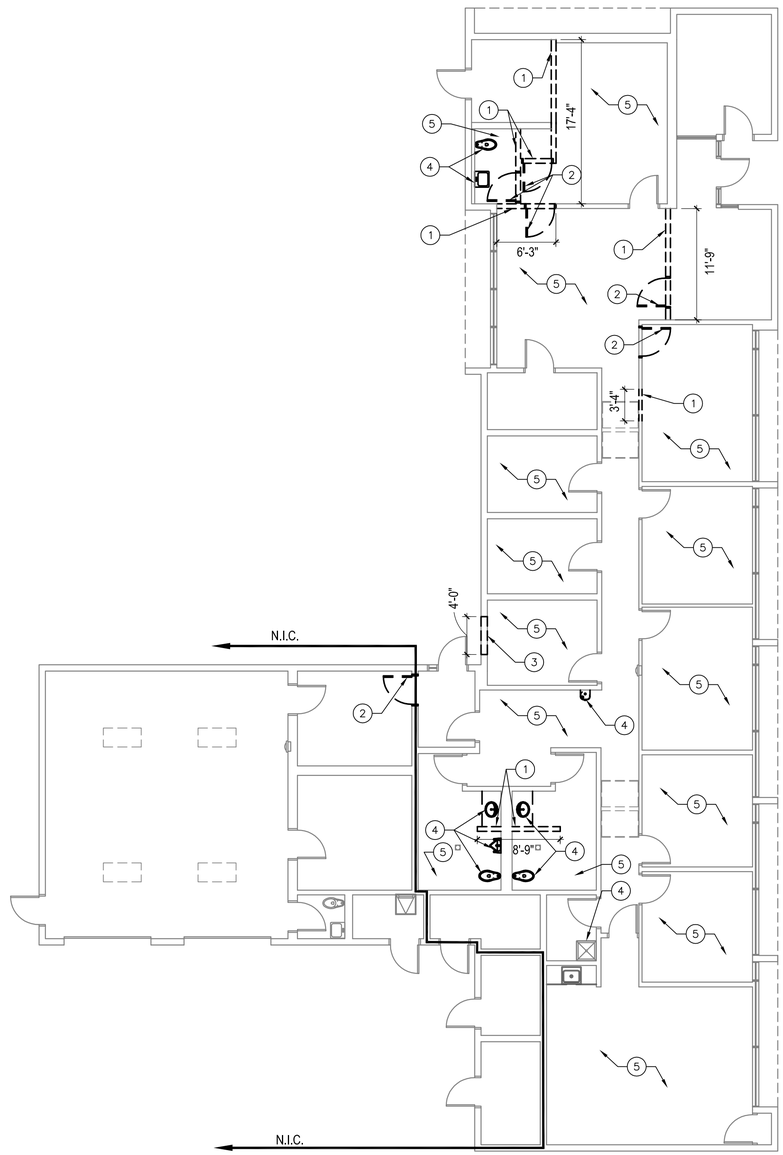

A1 DEMOLITION FLOOR PLAN
SCALE: 1/8" = 1'-0"

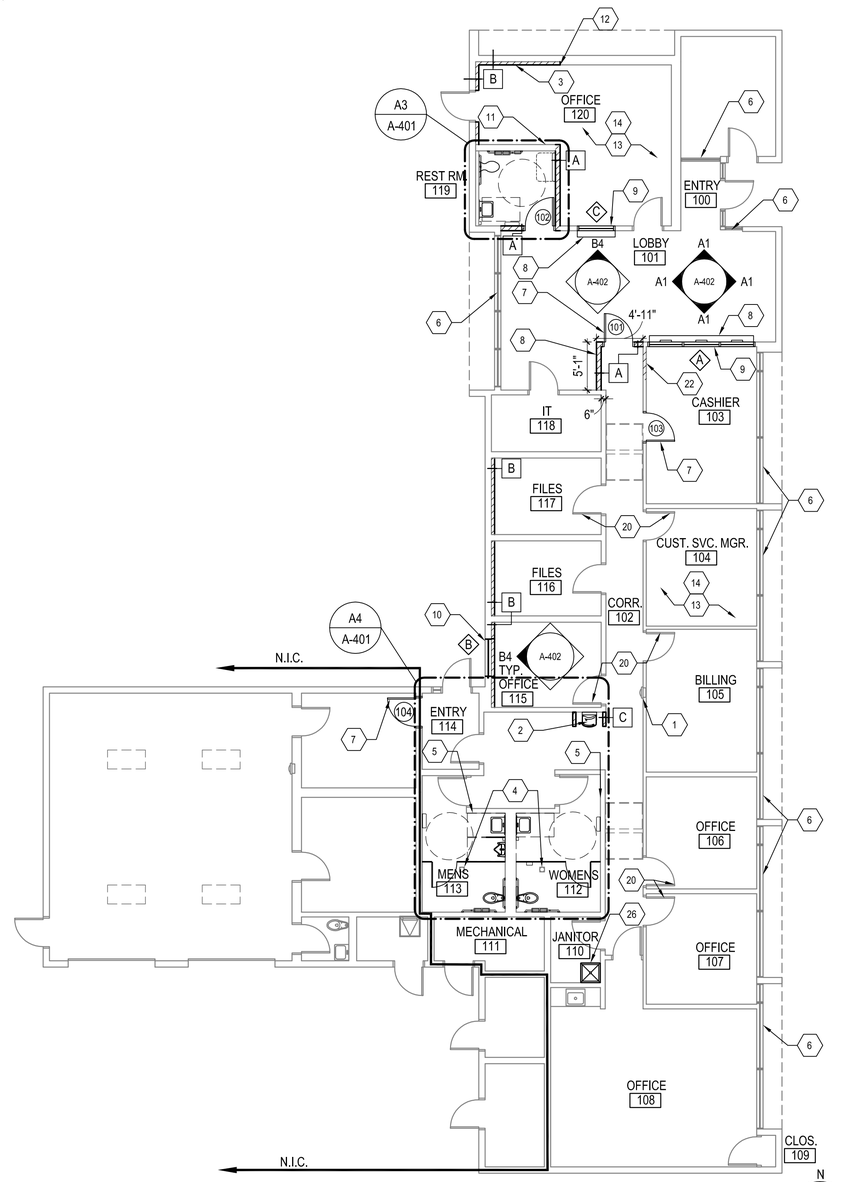

A3 NEW FLOOR PLAN
SCALE: 1/8" = 1'-0"

GENERAL NOTES

A. DOORS INSTALLED WITH HINGE SIDE OF JAMB 4" FROM ADJACENT WALL UNLESS OTHERWISE NOTED.
B. WINDOWS ARE DENOTED WITH (X) SYMBOL, SEE A-401 FOR DETAILS.
C. CONTRACTOR TO FIELD VERIFY ALL EXISTING CONDITIONS AND DIMENSIONS PRIOR TO START OF WORK. RECORD, DOCUMENT AND REPORT ANY CONDITIONS THAT VARY FROM DRAWINGS TO DESIGN PROFESSIONAL.
D. ALL DIMENSIONS ARE TO FACE OF CMU OR STUD UNLESS NOTED OTHERWISE.
E. WALL TYPES DENOTED WITH — X
F. CAP ABANDONED HVAC FLOOR DUCTS AND FILL OPENINGS IN PREPARATION FOR NEW FLOORING. REFER TO MECHANICAL PLANS FOR LOCATIONS AND SIZES.
G. REFER TO G-001 FOR ADDITIVE ALTERNATE DESCRIPTIONS.
H. CLEAN ALL SURFACES IN ROOMS 106, 107, 108, 115, 116 & 117.
I. INSTALL CORNER GUARDS AT ALL GYPSUM BOARD OUTSIDE CORNERS.
J. REFINISH ALL EXISTING DOORS AND FRAMES WITH COLORS PER FINISH SCHEDULE AT INTERIOR & EXTERIOR OF ALL ROOMS IN CONTRACT AS PART OF BASE BID.
K. INSTALL NEW MINIMUM R-38 BATT INSULATION UNDER ROOF THROUGHOUT ENTIRE BUILDING, INCLUDING AREAS SHOWN AS ALTERNATES, AS PART OF BASE BID.

KEYED NOTES (X)

1. EXISTING FIRE EXTINGUISHER AND SEMI-RECCESSED CABINET TO REMAIN.
2. NEW ADA COMPLIANT EWC AND WATER BOTTLE FILL STATION, SEE PLUMBING.
3. SCHEDULED WALL, REFER TO WALL TYPE SCHEDULE ON THIS SHEET.
4. EXISTING FLOOR DRAIN TO REMAIN, SEE PLUMBING.
5. PATCH WALL WHERE PAPER TOWEL DISPENSER WAS REMOVED.
6. EXISTING WINDOW TO REMAIN, RE-SEAL.
7. NEW DOOR, FRAME AND HARDWARE, SEE DOOR SCHEDULE, A-601.
8. 12" SOLID SURFACE WRITING SHELF & STEEL SUPPORT.
9. NEW BULLET RESISTANT CASHIER'S WINDOW, SEE WINDOW SCHEDULE.
10. NEW EXTERIOR WINDOW, SEE WINDOW SCHEDULE, A-601.
11. EXISTING CMU WALL TO REMAIN.
12. ADJUST THICKNESS OF FURR-OUT AT THIS LOCATION TO MATCH PLANE OF EXISTING WALL.
13. NEW FLOOR FINISHES, TYPICAL PER FINISH SCHEDULE, A-601.
14. PATCH, PREPARE AND PAINT WALLS, TYPICAL PER FINISH SCHEDULE, A-601.
15. 3 5/8" METAL STUD.
16. 6" METAL STUD.
17. BATT INSULATION, R-38 AT CEILINGS, R-19 AT WALLS.
18. 5/8" GYPSUM BOARD. TAPE, TEXTURE & PAINT.
19. SCHEDULED BASE, TYPICAL.
20. EXISTING DOOR, FRAME & HARDWARE TO REMAIN, RE-FINSH INTERIOR & EXTERIOR, TYPICAL.
21. METAL TRACK.
22. INFILL WALL TO MATCH EXISTING.
23. SCHEDULED CEILING.
24. EXISTING STRUCTURE.
25. LONG-LEG TRACK AND ACOUSTIC BATT ATTACHED TO EXISTING STRUCTURE.
26. NEW MOP SINK, SEE PLUMBING.

DEMOLITION NOTES (X)

1. DEMOLISH WALL.
2. DEMOLISH DOOR, FRAME AND HARDWARE.
3. CUT AND REINFORCE WINDOW OPENING INTO CMU WALL, REFER TO S-101 FOR DETAILS.
4. REMOVE PLUMBING FIXTURES & RESTROOM ACCESSORIES.
5. REMOVE ALL FLOOR, WALL AND CEILING FINISHES. REFER TO ADDITIVE ALTERNATES ON G-001 FOR LIMITS.

LEGEND

WALL TO BE DEMOLISHED
EXISTING WALL TO REMAIN
NEW WALL

0 1' 2' 3'
SCALE:3/4"=1'

0 4' 8' 16'
SCALE:1/8"=1'

FINAL

WHPacific
6501 Americas Pkwy NE, Suite 400
Albuquerque, NM 87110
505.247.0294 Fax 505.242.4845
www.whpacific.com

STATE OF NEW MEXICO
PAUL W. BROWNE
12426
REGISTERED ARCHITECT
6-29-18

REVISIONS & ADDENDUMS			
#	DATE	REMARKS	

DRAWING INFO.	
DESIGNED	PWB
DRAWN	EJ
CHECKED	PWB
APPROVED	
LAST EDIT	
PLOT DATE	
SUBMITTAL	6/29/18

DRAWING SCALE
AS NOTED

DEMOLITION & NEW FLOOR PLANS, WALL TYPES

CITY OF LAS VEGAS, NEW MEXICO
UTILITIES OFFICE BUILDING RENOVATION - PHASE I

PROJECT NUMBER P002065TW.1
DRAWING FILE NAME P002065TW.1-A-101.DWG

SHEET NUMBER
A-101

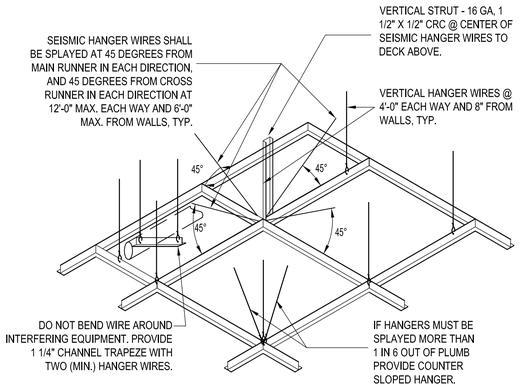

NOTES:

1. HANGER WIRES MUST BE 12 GA. MIN. SOFT ANNEALED, MILD STEEL WIRE. AT RUNNERS AND SUPPORTS WITH A MIN. OF THREE TURNS.

2. CLIPS SHALL HOLD RUNNERS TIGHTLY TOGETHER. SPLICE CLIPS SHALL BE CAPABLE OF RESISTING AT LEAST 50 LBS IN TENSION OR COMPRESSION.

3. FOR MANUFACTURED SYSTEMS, SUBMIT SUBSTANTIATION IN ACCORDANCE WITH IBC STANDARDS

4. RUNNERS SHALL BE CAPABLE OF SUPPORTING CEILING SYSTEM WITH DEFLECTIONS LESS THAN 0.133 INCHES.

5. LOCAL KINKS AND BENDS SHALL NOT BE MADE HANGER WIRES FOR LEVELING.

6. ALL SUSPENDED SYSTEMS SHALL BE HUNG IN A SIMILAR FASHION, INCLUDING, BUT NOT LIMITED TO, DUCTWORK, LIGHT FIXTURES, AND PIPING.

C1 CEILING SUSPENSION DETAIL

NOT TO SCALE

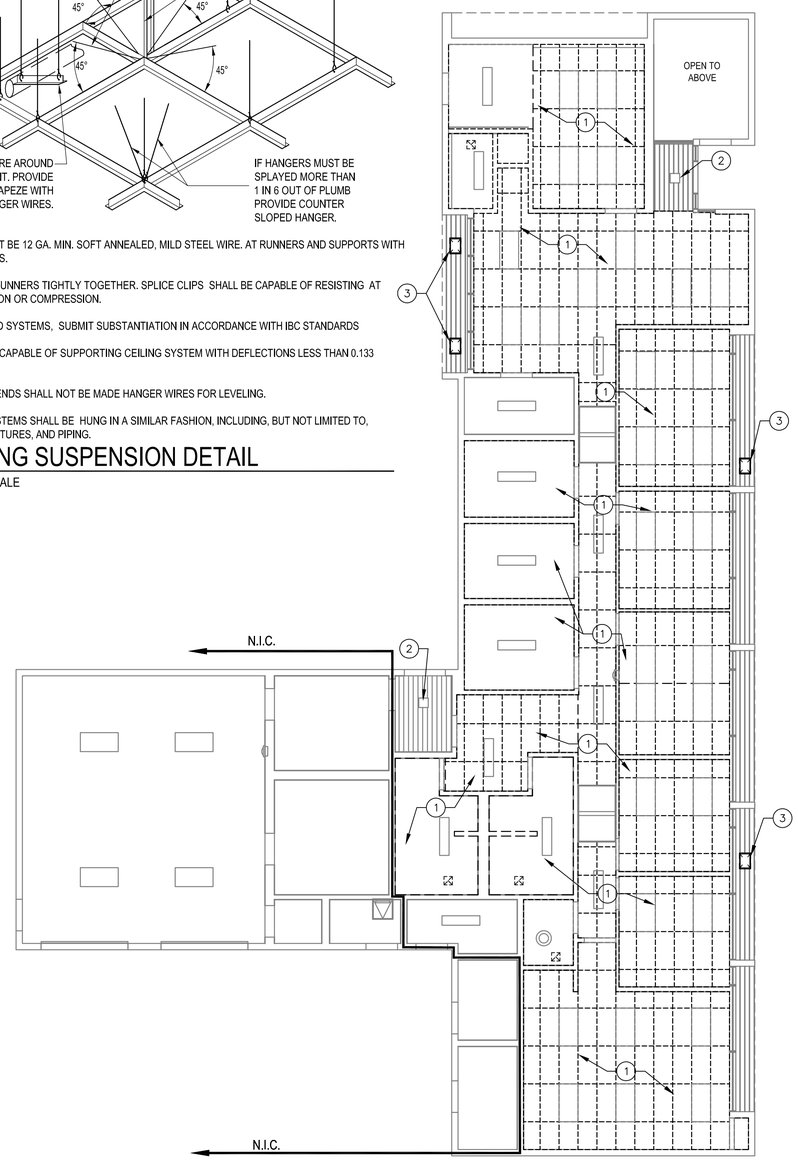

A1 DEMOLITION REFLECTED CEILING PLAN

SCALE: 1/8" = 1'-0"

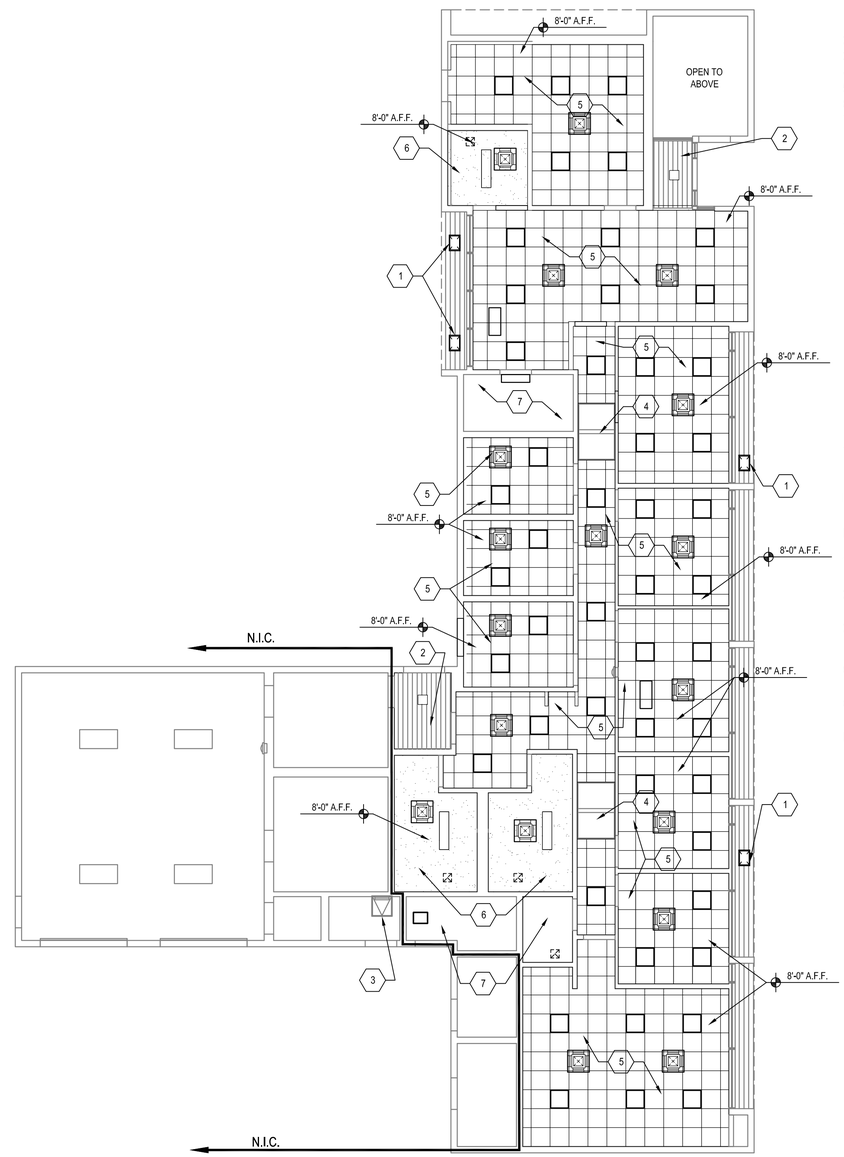

A3 NEW REFLECTED CEILING PLAN

SCALE: 1/8" = 1'-0"

GENERAL NOTES

A. CONTRACTOR TO FIELD VERIFY ALL EXISTING CONDITIONS AND DIMENSIONS PRIOR TO START OF WORK. RECORD, DOCUMENT AND REPORT ANY CONDITIONS THAT VARY FROM DRAWINGS TO ARCHITECT.
B. ALL DIMENSIONS ARE TO FACE OF CMU OR STUD UNLESS NOTED OTHERWISE.
C. REFER TO G-001 FOR ADDITIVE ALTERNATE DESCRIPTIONS.

KEYED NOTES (X)

1. EXISTING SOFFIT, INSTALL AIR INTAKES PER MECHANICAL PLANS & FRAME AROUND INTAKES TO SUPPORT SOFFIT MATERIAL. REATTACH SOFFIT MATERIAL & TRIM WHERE LOOSE.
2. EXISTING WOOD CEILING TO REMAIN.
3. EXISTING ROOF LADDER AND HATCH TO REMAIN.
4. EXISTING SKYLIGHT TO REMAIN.
5. NEW 2'x2' CEILING GRID AND TILES.
6. NEW GYPSUM BOARD CEILING, TAPE, TEXTURE AND PAINT.
7. EXPOSED TO STRUCTURE OR EXISTING CEILING TO REMAIN.

DEMOLITION KEYED NOTES (1)

1. REMOVE CEILING IN ROOMS AS INDICATED.
2. REMOVE EXISTING LIGHT FIXTURE AND PORTION OF CEILING TO REMAIN TO PERMIT INSTALLATION OF NEW LIGHT FIXTURE.
3. CUT, FRAME & SUPPORT OPENINGS FOR NEW HVAC AIR INTAKES, REFER TO MECHANICAL PLANS.

LEGEND

MECHANICAL CASSETTE
EXHAUST FAN
1'x4' LED LIGHT FIXTURE
2'x2' LED LIGHT FIXTURE
2'x2' CEILING GRID & TILES
GYPSUM BOARD CEILING
GYPSUM BOARD SOFFIT
EXISTING WOOD CEILING OR SOFFIT TO REMAIN

0 4' 8' 16'
SCALE:1/8"=1'

FINAL

WHPacific
6501 Americas Pkwy NE, Suite 400
Albuquerque, NM 87110
505.247.0294 Fax 505.242.4845
www.whpacific.com

STATE OF NEW MEXICO
PAUL W. BROWNE
12142263
REGISTERED ARCHITECT
6-29-18

REVISIONS & ADDENDUMS		
#	DATE	REMARKS

DRAWING INFO.	
DESIGNED	PWB
DRAWN	EJ
CHECKED	PWB
APPROVED	
LAST EDIT	
PLOT DATE	
SUBMITTAL	6/29/18

DEMOLITION & NEW REFLECTED CEILING PLANS

CITY OF LAS VEGAS, NEW MEXICO
UTILITIES OFFICE BUILDING RENOVATION - PHASE I

DRAWING SCALE: AS NOTED

PROJECT NUMBER: P0020657W.1
DRAWING FILE NAME: P0020657W.1-A-102.DWG

SHEET NUMBER
A-102

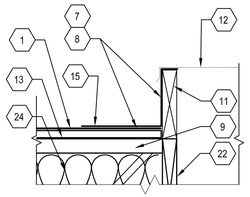

D1 EQUIPMENT CURB
SCALE: 1 1/2" = 1'-0"

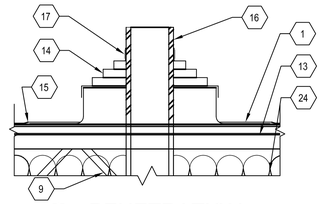

D2 PENETRATION
SCALE: 1 1/2" = 1'-0"

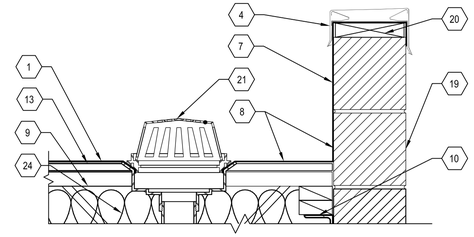

D3 ROOF DRAIN & PARAPET CAP
SCALE: 1 1/2" = 1'-0"

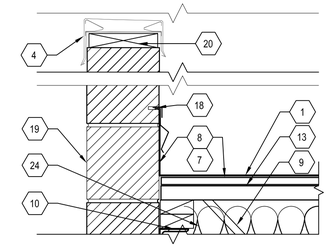

D4 REGLET DETAIL
SCALE: 1 1/2" = 1'-0"

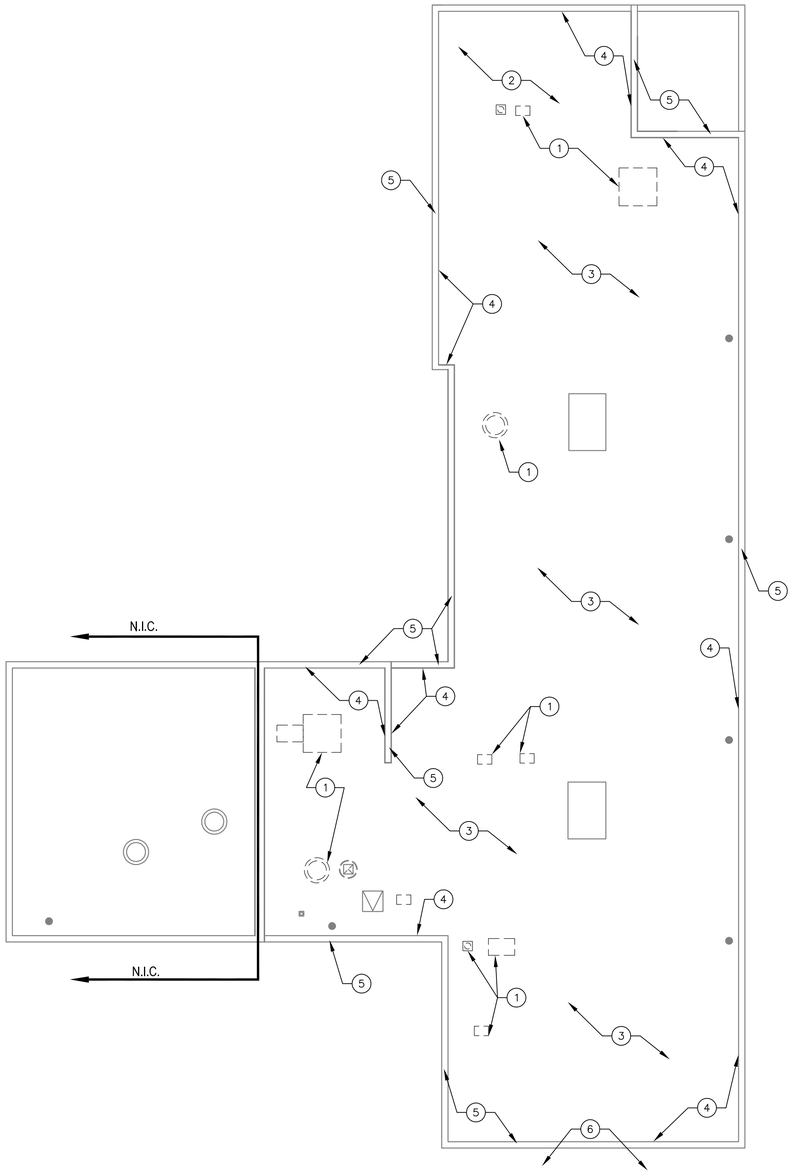

A1 DEMOLITION ROOF PLAN
SCALE: 1/8" = 1'-0"

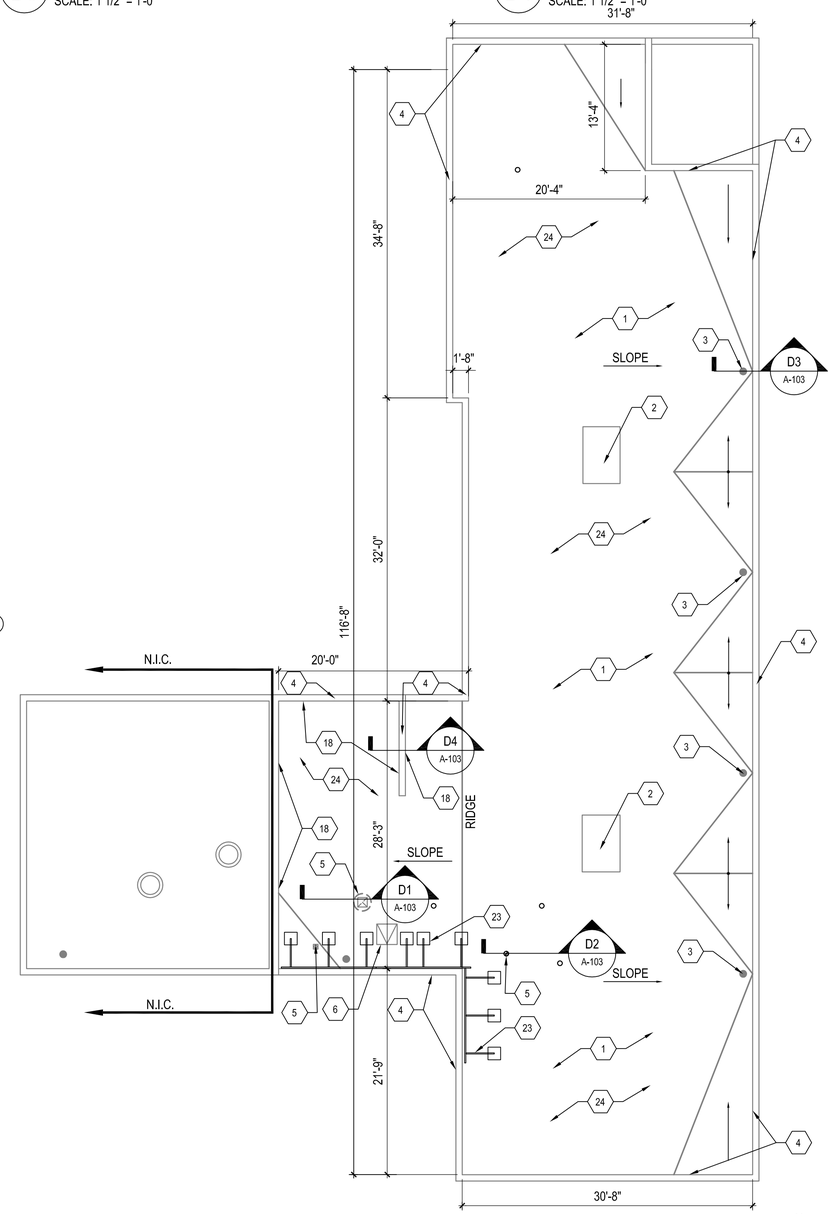

A3 ROOF PLAN
SCALE: 1/8" = 1'-0"

GENERAL NOTES

A. CONTRACTOR TO FIELD VERIFY ALL EXISTING CONDITIONS AND DIMENSIONS PRIOR TO START OF WORK. RECORD, DOCUMENT AND REPORT ANY CONDITIONS THAT VARY FROM DRAWINGS TO ARCHITECT.
B. ALL DIMENSIONS ARE TO FACE OF CMU OR STUD UNLESS NOTED OTHERWISE.
C. REFER TO G-001 FOR ADDITIVE ALTERNATE DESCRIPTIONS.

KEYED NOTES (X)

1. NEW 60 MIL, 20 YEAR WARRANTED TPO ROOF.
2. EXISTING SKYLIGHT TO REMAIN, EXTEND CURB TO COMPLY WITH ROOF MANUFACTURER WARRANTY REQUIREMENTS.
3. CLEAN & REINSTALL ROOF DRAIN BASKETS AT EXISTING LOCATIONS.
4. NEW PRE-FINISHED PARAPET CAP.
5. NEW ROOFTOP HVAC EQUIPMENT IN SAME PENETRATION AS EXISTING, SEE MECHANICAL PLANS.
6. EXISTING ROOF HATCH TO REMAIN, EXTEND CURB TO COMPLY WITH ROOF MANUFACTURER WARRANTY REQUIREMENTS AND INSTALL HATCH FALL PROTECTION.
7. TPO ROOF, CONTINUOUS UP WALL AND OVER PARAPET TOP.
8. TPO MEMBRANE ADHESIVE PER MANUFACTURER.
9. EXISTING JOIST.
10. EXISTING HSS LEDGER.
11. EXISTING CURB, EXTEND CURB TO COMPLY WITH ROOF MANUFACTURER WARRANTY REQUIREMENTS.
12. SKYLIGHT OR MECHANICAL UNIT (SEE MANUFACTURER FOR INSTALLATION DETAILS).
13. EXISTING ROOF DECK.
14. PRE-MOLDED TPO PIPE BOOT.
15. HEAT WELD PIPE BOOT TO TPO ROOF MEMBRANE.
16. TYPICAL ROOF PENETRATION.
17. CLAMPING RING.
18. REGLET TO REMAIN AT HIGH WALLS. REMOVE, CLEAN AND REINSTALL REGLET WITH NEW BACKER ROD AND SEALANT. SEE DETAIL THIS SHEET.
19. EXISTING CMU WALL.
20. NEW TREATED 2x ATTACHED TO PARAPET WITH EPOXY ATTACHED ANCHOR BOLT MINIMUM 6'-0" O.C..
21. EXISTING ROOF DRAIN UNIT. CLEAN AND RE-ATTACH STRAINER DOME.
22. PENETRATION BLOCKING TO REMAIN.
23. NEW, GALVANIZED, NON-PENETRATING ROOFTOP FALL PROTECTION RAILING.
24. INSTALL NEW, MINIMUM R-38 BATT INSULATION UNDER ROOF SURFACE THROUGHOUT BUILDING.

DEMOLITION NOTES (X)

1. REMOVE ALL MECHANICAL EQUIPMENT, SEE MECHANICAL PLANS.
2. REMOVE ALL ELECTRICAL EQUIPMENT, SEE ELECTRICAL PLANS.
3. REMOVE EXISTING TPO ROOF IN ITS ENTIRETY, REPLACE ANY DAMAGED INSULATION, FLASHING OR DECKING AS NECESSARY.
4. REMOVE ALL EXISTING REGLET FLASHING.
5. REMOVE ALL LOOSE MORTAR AND SEALANT FROM PARAPETS AND PREPARE FOR METAL CAP INSTALLATION.
6. TRIM TREES TO PROVIDE CLEARANCE FROM ROOF.

0 6" 1' 2'
SCALE:1-1/2"=1'

0 4' 8' 16'
SCALE:1/8"=1'

FINAL

WHPacific
6501 Americas Pkwy NE, Suite 400
Albuquerque, NM 87110
505.247.0294 Fax 505.242.4845
www.whpacific.com

STATE OF NEW MEXICO
PAUL W. BROWNE
12142263
REGISTERED ARCHITECT
6-29-18

REVISIONS & ADDENDUMS		
#	DATE	REMARKS

DRAWING INFO.	
DESIGNED	PWB
DRAWN	EJ
CHECKED	PWB
APPROVED	
LAST EDIT	
PLOT DATE	
SUBMITTAL	6/29/18

DEMOLITION ROOF AND NEW ROOF PLANS

CITY OF LAS VEGAS, NEW MEXICO
UTILITIES OFFICE BUILDING RENOVATION - PHASE I

DRAWING SCALE
AS NOTED

PROJECT NUMBER P0020657W.1
DRAWING FILE NAME P0020657W.1-A-103.DWG

SHEET NUMBER
A-103

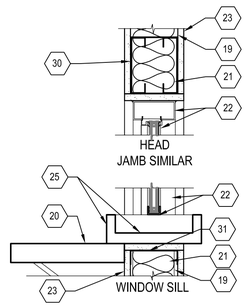

D1 NEW CASHIER WINDOW
SCALE: 1 1/2" = 1'-0"

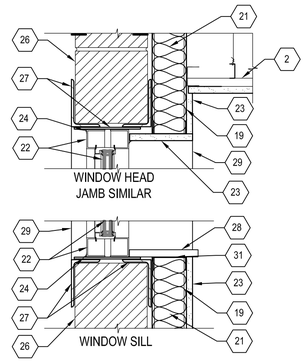

D2 NEW WINDOW AT CMU WALL
SCALE: 1 1/2" = 1'-0"

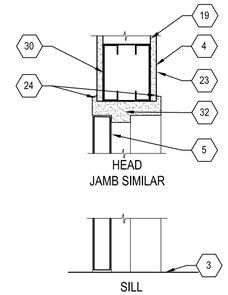

D3 DOOR AT FRAMED WALL
SCALE: 1 1/2" = 1'-0"

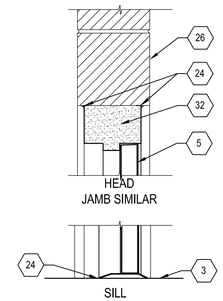

D4 DOOR AT CMU WALL
SCALE: 1 1/2" = 1'-0"

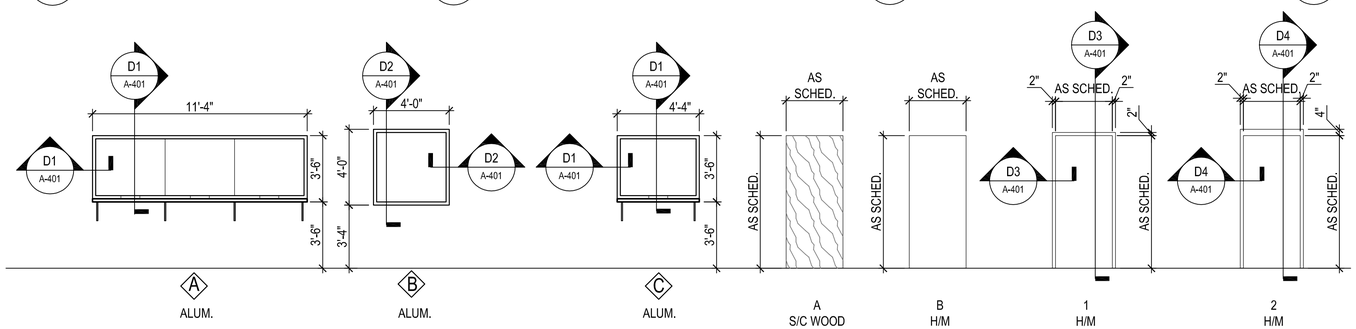

C1 WINDOW, DOOR & FRAME ELEVATIONS
SCALE: 1/4" = 1'-0"

GENERAL NOTES

A. DOORS INSTALLED WITH HINGE SIDE OF JAMB 4" FROM ADJACENT WALL UNLESS OTHERWISE NOTED.
B. CONTRACTOR TO FIELD VERIFY ALL EXISTING CONDITIONS AND DIMENSIONS PRIOR TO START OF WORK. RECORD, DOCUMENT AND REPORT ANY CONDITIONS THAT VARY FROM DRAWINGS TO ARCHITECT.
C. ALL DIMENSIONS ARE TO FACE OF CMU OR STUD UNLESS NOTED OTHERWISE.
D. REFER TO G-001 FOR ADDITIVE ALTERNATE DESCRIPTIONS.
E. PROVIDE MOISTURE RESISTANT GYPSUM BOARD AT ALL WET AREAS.

KEYED NOTES

1. SINGLE, ACCESSIBLE EWC & WATER BOTTLE FILL STATION.
2. SCHEDULED CEILING.
3. SCHEDULED FLOOR.
4. SCHEDULED WALL.
5. SCHEDULED DOOR, FRAME & HARDWARE.
6. TOILET PAPER DISPENSER.
7. 24" x 36" MIRROR.
8. SOAP DISPENSER.
9. 42" LONG GRAB BAR.
10. 36" LONG GRAB BAR.
11. 18" LONG VERTICAL GRAB BAR.
12. FLOOR MOUNTED, ADA COMPLIANT WATER CLOSET.
13. SEMI-RECCESSED, COMBINATION PAPER TOWEL DISPENSER/WASTE RECEPTACLE.
14. SANITARY NAPKIN DISPOSAL.
15. TOILET SEAT COVER DISPENSER.
16. WALL MOUNTED LAVATORY.
17. COAT HOOK.
18. WALL MOUNTED URINAL.
19. 3 5/8" METAL STUD.
20. 12" SOLID SURFACE WRITING SHELF AND 10"x10" WELDED STEEL SUPPORTS.
21. BATT INSULATION.
22. WINDOW FRAME & GLAZING.
23. 5/8" GYPSUM BOARD. TAPE, TEXTURE & PAINT.
24. SEALANT.
25. CASHIER WINDOW PASS-THROUGH.
26. EXISTING CMU WALL, SEE STRUCTURAL DETAILS ON S-101 FOR CUTTING AND REINFORCEMENT.
27. STRUCTURAL STEEL REINFORCEMENT, SEE STRUCTURAL DETAILS ON S-101.
28. STAIN GRADE SOLID WOOD WINDOW SILL WITH CLEAR SEALANT.
29. EDGE OF WALL BEYOND.
30. METAL BOX HEADER.
31. METAL TRACK.
32. FULLY GROUTED HOLLOW METAL DOOR FRAME.
33. DIAPER CHANGING STATION, DASHED LINE REPRESENTS SIZE WHEN OPENED.

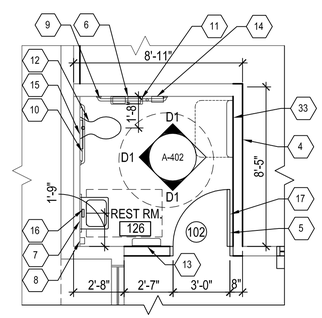

A3 SINGLE USE RESTROOM
SCALE: 1/4" = 1'-0"

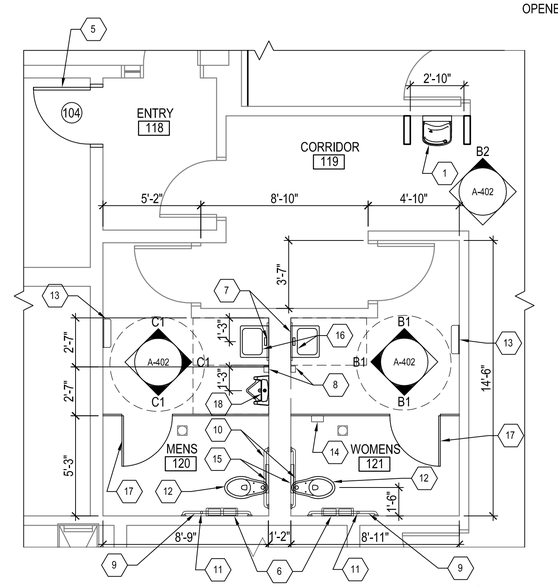

A4 STAFF RESTROOMS
SCALE: 1/4" = 1'-0"

0 6" 1' 2'
SCALE:1-1/2"=1'

0 2' 4' 8'
SCALE:1/4"=1'

FINAL

WHPacific
6501 Americas Pkwy NE, Suite 400
Albuquerque, NM 87110
505.247.0294 Fax 505.242.4845
www.whpacific.com

STATE OF NEW MEXICO
PAUL W. BROWNE
12432
REGISTERED ARCHITECT
6-29-18

REVISIONS & ADDENDUMS		
#	DATE	REMARKS

DRAWING INFO.	
DESIGNED	PWB
DRAWN	EJ
CHECKED	PWB
APPROVED	
LAST EDIT	
PLOT DATE	
SUBMITTAL	6/29/18

ENLARGED FLOOR PLANS, DOOR & WINDOW DETAILS
STRUCTURAL DETAILS
CITY OF LAS VEGAS, NEW MEXICO
UTILITIES OFFICE BUILDING RENOVATION - PHASE I

PROJECT NUMBER	DRAWING FILE NAME	DRAWING SCALE
P0020657W.1	P0020657W.1-A-401.DWG	AS NOTED

SHEET NUMBER
A-401

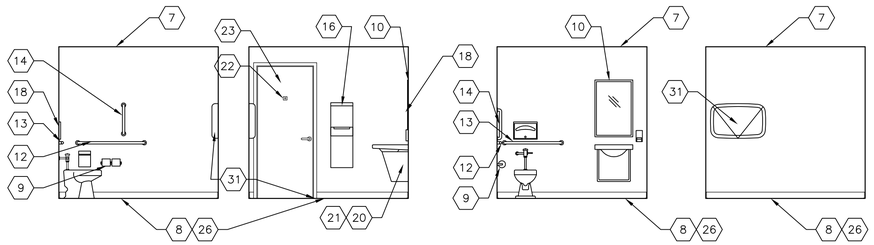

D1 SINGLE USE RESTROOM ELEVATIONS

SCALE: 1/4" = 1'-0"

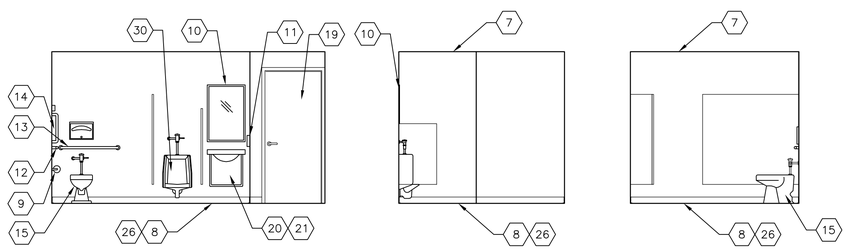

C1 STAFF MENS ROOM ELEVATIONS

SCALE: 1/4" = 1'-0"

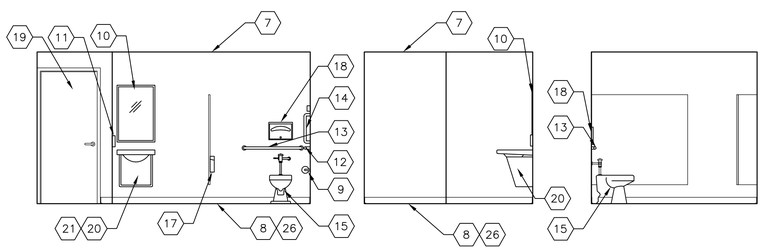

B1 STAFF WOMENS ROOM ELEVATIONS

SCALE: 1/4" = 1'-0"

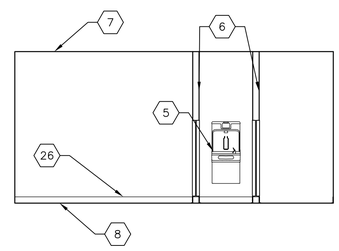

B2 DRINKING FOUNTAIN ELEVATION

SCALE: 1/4" = 1'-0"

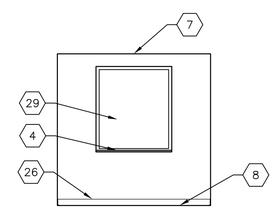

B4 OFFICE 115 WINDOW ELEVATION

SCALE: 1/4" = 1'-0"

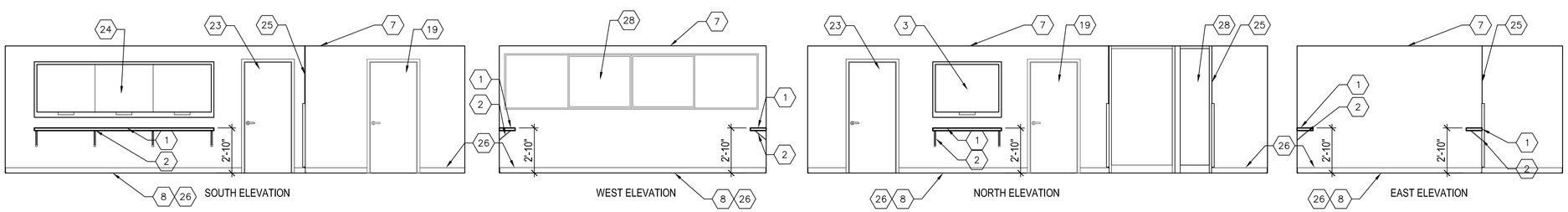

A1 LOBBY ELEVATIONS

SCALE: 1/4" = 1'-0"

0 2' 4' 8'

SCALE:1/4"=1'

FINAL

GENERAL NOTES

A. CONTRACTOR TO FIELD VERIFY ALL EXISTING CONDITIONS AND DIMENSIONS PRIOR TO START OF WORK. RECORD, DOCUMENT AND REPORT ANY CONDITIONS THAT VARY FROM DRAWINGS TO ARCHITECT.
B. ALL DIMENSIONS ARE TO FACE OF CMU OR STUD UNLESS NOTED OTHERWISE.
C. REFER TO G-001 FOR ADDITIVE ALTERNATE DESCRIPTIONS.
D. INSTALL CORNER GUARDS AT ALL OUTSIDE GYPSUM BOARD CORNERS.

KEYED NOTES

1. 12" SOLID SURFACE COUNTER.
2. 10"x10" WELDED STEEL COUNTER SUPPORT, TYPICAL.
3. NEW 4'-0"x4'-0" BULLET RESISTANT CASHIER'S WINDOW, SEE WINDOW SCHEDULE.
4. NEW WOOD WINDOW SILL.
5. SINGLE, ADA ACCESSIBLE EWC & WATER BOTTLE FILL STATION.
6. 4" METAL STUD WING WALL.
7. SCHEDULED CEILING & SUPPORT SYSTEM.
8. SCHEDULED FLOOR.
9. TOILET PAPER DISPENSER.
10. 24" x 36" MIRROR.
11. SOAP DISPENSER.
12. 42" LONG GRAB BAR.
13. 36" LONG GRAB BAR.
14. 18" LONG VERTICAL GRAB BAR.
15. FLOOR MOUNTED WATER CLOSET.
16. SEMI-RECCESSED, COMBINATION PAPER TOWEL DISPENSER/TRASH RECEPTACLE.
17. SANITARY NAPKIN DISPOSAL.
18. TOILET SEAT COVER DISPENSER.
19. DOOR BEYOND.
20. WALL MOUNTED LAVATORY.
21. PVC LAVATORY SHIELD.
22. COAT HOOK.
23. NEW DOOR, FRAME AND HARDWARE, SEE DOOR SCHEDULE.
24. NEW 11'-0"x4'-0" BULLET RESISTANT CASHIER'S WINDOW, SEE WINDOW SCHEDULE.
25. EDGE OF WALL BEYOND.
26. SCHEDULED BASE.
27. NOT USED.
28. EXISTING GLAZING BEYOND.
29. NEW 4'-0"x4'-0" WINDOW, SEE WINDOW SCHEDULE.
30. NEW URINAL, SEE PLUMBING.
31. BABY CHANGING STATION.

WHPacific
6501 Americas Pkwy NE, Suite 400
Albuquerque, NM 87110
505.247.0294 Fax 505.242.4845
www.whpacific.com

STATE OF NEW MEXICO
PAUL W. BROWNE
12142
REGISTERED ARCHITECT
6-29-18

REVISIONS & ADDENDUMS		
#	DATE	REMARKS

DRAWING INFO.	
DESIGNED	PWB
DRAWN	EJ
CHECKED	PWB
APPROVED	
LAST EDIT	
PLOT DATE	
SUBMITTAL	6/29/18

INTERIOR ELEVATIONS

CITY OF LAS VEGAS, NEW MEXICO
UTILITIES OFFICE BUILDING RENOVATION - PHASE I

DRAWING SCALE: AS NOTED

PROJECT NUMBER: P0020657W.1
DRAWING FILE NAME: P0020657W.1-A-402.DWG

SHEET NUMBER
A-402

GENERAL NOTES

A. CONTRACTOR TO FIELD VERIFY ALL EXISTING CONDITIONS AND DIMENSIONS PRIOR TO START OF WORK. RECORD, DOCUMENT AND REPORT ANY CONDITIONS THAT VARY FROM DRAWINGS TO ARCHITECT.
B. MATERIALS LISTED ARE FOR BASIS OF DESIGN ONLY.
C. REFER TO G-001 FOR ADDITIVE ALTERNATE DESCRIPTIONS.
D. REFINISH ALL EXISTING DOORS AND FRAMES WITH COLORS PER FINISH SCHEDULE AT INTERIOR & EXTERIOR OF ALL ROOMS IN CONTRACT AS PART OF BASE BID.

DOOR SCHEDULE

MARK	DOOR TYPE	WIDTH	HEIGHT	MATL	FRAME TYPE	MATL	DETAILS	HDWR	COMMENTS
101	A	3'-0"	7'-0"	WD	1	HM	D3/A-401	2.0	
102	A	3'-0"	7'-0"	WD	1	HM	D3/A-401	3.0	
103	A	3'-0"	7'-0"	WD	1	HM	D3/A-401	1.0	2 ONE-WAY PEEPHOLES @ STD & ADA HEIGHT
104	B	3'-0"	7'-0"	HM	2	HM	D4/A-401	3.0	

NOTE REFINISH ALL EXISTING DOORS AND FRAMES AT INTERIOR & EXTERIOR OF ALL ROOMS IN CONTRACT AS PART OF BASE BID. WOOD DOORS TO BE STAINED TO MATCH EXISTING.

WINDOW SCHEDULE

WINDOW TYPE	WIDTH	HEIGHT	MATERIAL	GLAZING	DETAILS	COMMENTS
A	11'-0"	4'-0"	CLEAR ALUM.	CLEAR, BULLET RESISTANT	D1/A-401	CASHIER'S WINDOW WITH INTEGRAL TRAYS
B	4'-0"	4'-0"	BRONZE ALUM.	TINTED, LOW-E DOUBLE GLAZED	D2/A-401	EXTERIOR FIXED WINDOW
C	4'-0"	4'-0"	CLEAR ALUM.	CLEAR, BULLET RESISTANT	D1/A-402	CASHIER'S WINDOW WITH INTEGRAL TRAY

FINISH SCHEDULE

ROOM	NAME	BASE	CEILING	FLOOR	NORTH	EAST	SOUTH	WEST	COMMENTS
100	ENTRY	RWB	EXST	PC	---	---	---	---	
101	LOBBY	RWB	ACT	PC	PT-1	PT-1	PT-1	PT-1	LOBBY AND WAITING AREA
102	CORRIDOR	RWB	ACT	PC	PT-1	PT-1	PT-1	PT-1	
103	CASHIER	RWB	ACT	CT	PT-1	PT-1	PT-1	PT-1	
104	CUST. SVC. MGR.	RWB	ACT	CT	PT-1	PT-1	PT-1	PT-1	
105	BILLING	RWB	ACT	CT	PT-1	PT-1	PT-1	PT-1	
106	OFFICE	RWB	ACT	CT	PT-1	PT-1	PT-1	PT-1	ADDITIVE ALTERNATE #2
107	OFFICE	RWB	ACT	CT	PT-1	PT-1	PT-1	PT-1	ADDITIVE ALTERNATE #2
108	OPEN OFFICE	RWB	ACT	CT	PT-1	PT-1	PT-1	PT-1	ADDITIVE ALTERNATE #2
109	CLOSET	RWB	ACT	CT	PT-1	PT-1	PT-1	PT-1	
110	JANITOR	RWB	ACT	SC	PT-1	PT-1	PT-1	PT-1	
111	MECHANICAL	---	EXP	EXST	EXST	EXST	EXST	EXST	
112	WOMEN'S	RWB	GWB/PT-3	SC	EPXY	EPXY	EPXY	EPXY	
113	MEN'S	RWB	GWB/PT-3	SC	EPXY	EPXY	EPXY	EPXY	
114	ENTRY	EXST	EXST	EXST	PT-1	PT-1	PT-1	PT-1	
115	OFFICE	RWB	ACT	CT	PT-1	PT-1	PT-1	PT-1	ADDITIVE ALTERNATE #1
116	FILES	RWB	ACT	VCT	PT-1	PT-1	PT-1	PT-1	ADDITIVE ALTERNATE #1
117	FILES	RWB	ACT	VCT	PT-1	PT-1	PT-1	PT-1	ADDITIVE ALTERNATE #1
118	IT	EXST	EXST	EXST	EXST	EXST	EXST	EXST	NO WORK IN THIS ROOM
119	RESTROOM	RWB	GWB/PT-3	SC	EPXY	EPXY	EPXY	EPXY	
120	OPEN OFFICE	RWB	ACT	CT	PT-1	PT-1	PT-1	PT-1	

NOTES

1- REFER TO RCP FOR CEILING HEIGHTS
2- MATERIALS ARE SELECTED FOR DURABILITY, MANUFACTURERS ARE SELECTED AS BASIS OF DESIGN ONLY.

FINISH LEGEND

GWB	GYPSUM WALL BOARD	RWB	RUBBER WALL BASE	PT-1	PAINT AT WALLS
ACT	ACOUST. CEILING TILE	EXP	EXPOSED TO STRUCTURE	PT-2	PAINT AT H/M DOORS AND FRAMES
		EPXY	EPOXY PAINT	PT-3	PAINT AT CEILINGS
PC	POLISHED CONCRETE	FRP	FIBERGLASS REINFORCED PANEL	PC	POLISHED CONCRETE
SC	SEALED CONCRETE	VCT	VINYL COMPOSITION TILE	SC	SEALED CONCRETE
CT	CARPET TILE	EXST	EXISTING FINISH TO REMAIN	CT	CARPET TILE

COLOR LEGEND

PT-1 SW7005 PURE WHITE - SEMI GLOSS
PT-2 SW6069 FRENCH ROAST - SEMI GLOSS
PT-3 SW7757 HIGH REFLECTIVE WHITE - FLAT
WOOD STAIN - HONEY OAK TO MATCH EXISTING WOODWORK FOR ALL NEW WOODWORK AND REFINISHED, EXISTING DOORS.

FINAL

WHPacific
6501 Americas Pkwy NE, Suite 400
Albuquerque, NM 87110
505.247.0294 Fax 505.242.4845
www.whpacific.com

STATE OF NEW MEXICO
PAUL W. BROWNE
12142263
REGISTERED ARCHITECT
6-29-18

REVISIONS & ADDENDUMS

#	DATE	REMARKS

DRAWING INFO.	
DESIGNED	PWB
DRAWN	EJ
CHECKED	PWB
APPROVED	
LAST EDIT	
PLOT DATE	
SUBMITTAL	6/29/18

DOOR, WINDOW AND FINISH SCHEDULES

CITY OF LAS VEGAS, NEW MEXICO
UTILITIES OFFICE BUILDING RENOVATION - PHASE I

DRAWING SCALE: AS NOTED

PROJECT NUMBER: P0020657W.1
DRAWING FILE NAME: P0020657W.1-A-601.DWG

SHEET NUMBER
A-601

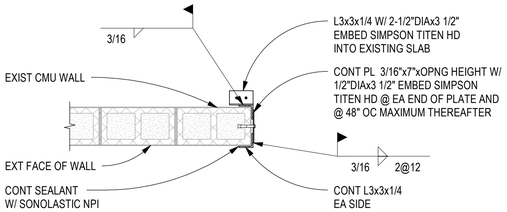

C4 NEW JAMB AT EXIST CMU WALL

SCALE: 3/4" = 1'-0"

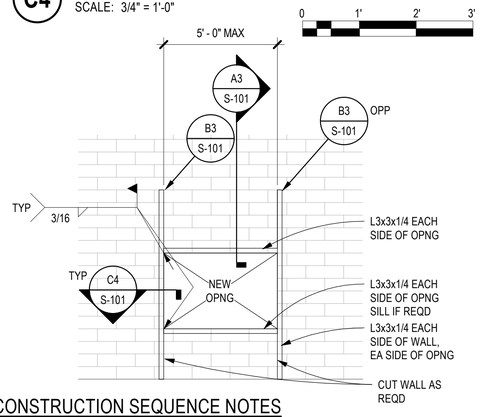

CONSTRUCTION SEQUENCE NOTES

1. ROUTE OUT MORTAR JOINT ON ONE SIDE OF WALL TO HALF WALL DEPTH. INSERT FIRST ANGLE
2. ROUTE OUT REMAINING MORTAR JOINT ON OPPOSITE SIDE OF WALL. INSERT SECOND ANGLE.
3. SAWCUT CMU AT JAMBS OF OPENING ON ONE SIDE OF WALL TO HALF WALL DEPTH, INSTALL FIRST ANGLE FROM TOP OF OPENING BOTTOM OF WALL.
4. SAWCUT CMU AT JAMBS OF OPENING ON REMAING SIDE OF WALL. INSTALL FIRST ANGLE FROM TOP OF OPENING BOTTOM OF WALL.
5. ATTACH CLOSURE PLATES.

B4 NEW OPNG IN EXIST CMU WALL

SCALE: NTS

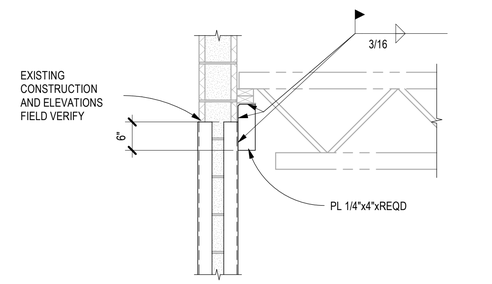

B3 JAMB TO EXIST ANGLE CONNECTION

SCALE: 3/4" = 1'-0"

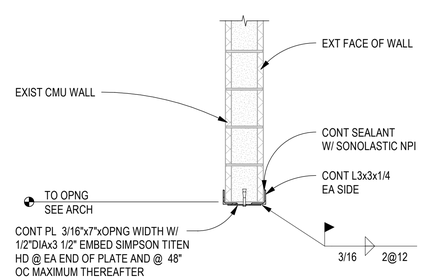

A3 NEW LINTEL AT EXIST CMU WALL

SCALE: 3/4" = 1'-0"

Chavez-Grieves
consulting engineers, inc.
4700 Lincoln Road NE, Suite 102 Albuquerque, NM 87109
505-344-4080 505-343-8759 fax

FINAL

WHPacific
6501 Americas Pkwy NE, Suite 400
Albuquerque, NM 87110
505-828-1000 Fax 505-242.4845
www.whpacific.com

JESUS A. SANCHEZ
NEW MEXICO
18709
LICENSED PROFESSIONAL ENGINEER
7/29/18

REVISIONS & ADDENDUMS

#	DATE	REMARKS

DRAWING INFO.	
DESIGNED	AS
DRAWN	JA
CHECKED	CR
APPROVED	
LAST EDIT	
PLOT DATE	06/29/18
SUBMITTAL	06/29/18

SECTIONS AND DETAILS
CITY OF LAS VEGAS, NEW MEXICO
UTILITIES OFFICE BUILDING RENOVATION - PHASE 1

PROJECT NUMBER	DRAWING FILE NAME	DRAWING SCALE
P0020657W.1	G:\W55\119 Mills Bldg LV\DRAWINGS\RVT\201 MILLS AVE STRUCT.rvt	AS NOTED

SHEET NUMBER
S-101

CHECKED BY:
DRAWN BY:
PLOT STAMP:
FILE NAME:

MECHANICAL SYMBOL LEGEND

NOTE: NOT ALL SYMBOLS USED ON THIS PROJECT

	SUPPLY DIFFUSER
	RETURN GRILLE
	EXHAUST GRILLE
	MANUAL BALANCING DAMPER
	FIRE DAMPER
F/S DPR	COMBINATION FIRE AND SMOKE DAMPER (NOT FOR DETECTORS INTEGRAL TO SMOKE DAMPERS)
M	MOTORIZED DAMPER
	FITTINGS WITH TURNING VANES
	CONNECT NEW DUCT TO EXISTING DUCT
	SMOKE DETECTOR
	FLOW ARROW - SUPPLY
	FLOW ARROW - EXHAUST/RETURN
	EXISTING PIPING
HWR	HOT WATER RETURN
HWS	HOT WATER SUPPLY
CHR	CHILLED WATER RETURN
CHS	CHILLED WATER SUPPLY
CTR	COOLING TOWER WATER SUPPLY
CTS	COOLING TOWER WATER RETURN
CD	CONDENSATE
HPR	HIGH PRESSURE STEAM RETURN
HPS	HIGH PRESSURE STEAM SUPPLY
MPR	MEDIUM PRESSURE STEAM RETURN
MPS	MEDIUM PRESSURE STEAM SUPPLY
LPR	LOW PRESSURE STEAM RETURN
LPS	LOW PRESSURE STEAM SUPPLY
VENT	VENT
FOR	FUEL OIL RETURN
FOS	FUEL OIL SUPPLY
RFS	REFRIGERANT SUCTION
RFL	REFRIGERANT LIQUID
CA	COMPRESSED AIR
	GATE VALVE
	BALL VALVE
	BUTTERFLY VALVE (MANUAL / MOTORIZED)
	CONTROL VALVE, TWO WAY
	CONTROL VALVE, THREE WAY
S	SOLENOID / CONTROL VALVE
	CHECK VALVE
	PRESSURE REDUCING VALVE
	RELIEF OR SAFETY VALVE
	WATER FLOW MEASURING DEVICE
	BALANCING VALVE W/ MEASURING DEVICE
	UNION: <3", FLANGE: >=3"
	STRAINER
	COIL CIRCULATING PUMP SEE DETAIL, SCHEDULE
	VENT
	REDUCER
	PRESSURE GAUGE
	T/P FITTING
	HOSE CONNECTION AND CAP
	FLEX CONNECTION
	SEISMIC SEPARATION ASSEMBLY
	ANCHOR
	EXPANSION LOOP
	EXPANSION COMPENSATOR
	GUIDE
T	ROOM THERMOSTAT
F	FREEZE STAT
H	HUMIDISTAT
CO2	CO2 SENSOR
S	SWITCH
P	DIFFERENTIAL PRESSURE SENSOR
PS	PRESSURE SENSOR
PD	PRESSURE DIFFERENTIAL SENSOR
TS	TEMPERATURE SENSOR
HS	HUMIDITY SENSOR
FS	FLOW SENSOR
AFF	ABOVE FINISHED FLOOR
BDD	BACK DRAFT DAMPER
CB-BDD	COUNTER BALANCED BACK DRAFT DAMPER
	DEMOLITION
	POINT OF CONNECTION NEW TO EXISTING

GENERAL FIRE STOPPING NOTE

A. ALL PIPE PENETRATIONS OF FIRE RATED WALLS AND FLOORS SHALL BE PROTECTED WITH APPROVED FIRE STOPPING ASSEMBLIES AS MANUFACTURED BY 3 M INDUSTRIES, OR APPROVED EQUAL. THE ASSEMBLIES SHALL COMPLY WITH LATEST APPLICABLE REQUIREMENTS OF UBC CODE, NFPA 13 AND OWNER INSURANCE. PROPOSED APPLICABLE ASSEMBLIES SHALL BE UL LISTED AND SHALL BE PART OF THE PLUMBING EQUIPMENT SUBMITTAL.

MECHANICAL CODES/STANDARDS

(APPLICABLE TO ALL MECHANICAL DRAWINGS)

- 2012 INTERNATIONAL MECHANICAL CODE
- 2012 INTERNATIONAL PLUMBING CODE
- 2012 INTERNATIONAL ENERGY CODE
- 2012 INTERNATIONAL FIRE CODE
- ASHRAE STANDARD 62.1, VENTILATION FOR ACCEPTABLE INDOOR AIR QUALITY
- ASHRAE STANDARD 90.1, ENERGY EFFICIENT DESIGN OF NEW BUILDINGS EXCEPT LOW-RISE RESIDENTIAL BUILDINGS

MECHANICAL ABBREVIATIONS

NOTE: NOT ALL ABBREVIATIONS USED ON THIS PROJECT

AC, A/C	AIR CONDITIONING	(E)	EXISTING	GPD	GALLONS PER DAY	MIN	MINIMUM	SA	SUPPLY AIR
AD	ACCESS DOOR	EA	EACH	GPH	GALLONS PER HOUR	MU	MAKE UP	SDPR	SMOKE DAMPER
ADJ	ADJUSTABLE	EAT	ENTERING AIR TEMPERATURE	GPM	GALLONS PER MINUTE			SL	SEA LEVEL
AFF	ABOVE FINISH FLOOR	ENG	ENGINEER	GV	GATE VALVE	N/A	NOT APPLICABLE	SP	STATIC PRESSURE
AHU	AIR HANDLING UNIT	EMCS	ENERGY MANAGEMENT CONTROL SYSTEM			N.C.	NORMALLY CLOSED	SQ	SQUARE
AL	ACOUSTICAL LINER	ESP	EXTERNAL STATIC PRESSURE	HB	HOSE BIBB	N.O.	NORMALLY OPEN	SS	STAINLESS STEEL
AP	ACCESS PANEL	EWT	ENTERING WATER TEMPERATURE	HD	HAND DAMPER or HEAD	N.I.C.	NOT IN CONTRACT		
APD	AIRSIDE PRESSURE DROP	EXH	EXHAUST	HEPA	HIGH EFFICIENCY PARTICULATE AIR (FILTER)	NO.	NUMBER OR DESIGNATION	TA	TRANSFER AIR
ARCH	ARCHITECT			HP	HORSEPOWER	NOM	NOMINAL	TOD	TOP OF DUCT
ASL	ABOVE SEA LEVEL	°F	DEGREES IN FAHRENHEIT	HR	HOUR			TOP	TOP OF PIPE
		FA	FREE AREA or FACE AREA			OA, OSA	OUTSIDE AIR	TSP	TOTAL STATIC PRESSURE
BAS	BUILDING AUTOMATION SYSTEM	FCO	FLOOR CLEANOUT	ID	INSIDE DIAMETER	OBD	OPPOSED BLADE DAMPER	TRANS	TRANSITION
BD	BALANCING DAMPER	FCU	FAN COIL UNIT	IN	INCH or INCHES	OC	ON CENTER(S)	T'STAT	THERMOSTAT
BDD	BACKDRAFT DAMPER	FD	FLOOR DRAIN			OD	OUTSIDE DIAMETER	TYP	TYPICAL
BHP	BRAKE HORSEPOWER	FDPR	FIRE DAMPER	KW	KILOWATT	OPNG	OPENING		
BOD	BOTTOM OF DUCT	FG	FILTER GAUGE	KWH	KILOWATT HOUR			UC	UNDERCUT
BOH	BACK OF HOUSE	FLEX	FLEXIBLE			PD	PRESSURE DROP	UNO	UNLESS NOTED OTHERWISE
BOP	BOTTOM OF PIPE	FLR	FLOOR	LAT	LEAVING AIR TEMPERATURE	PH	ELECTRICAL PHASE	VAC	VOLTS ALTERNATING CURRENT or VACUUM
BTU	BRITISH THERMAL UNIT	FPB	FAN POWERED BOX	LBS	POUNDS	PLBG	PLUMBING	VAV	VARIABLE AIR VOLUME
BTUH	BRITISH THERMAL UNIT PER HOUR	FPM	FEET PER MINUTE	LWT	LEAVING WATER TEMPERATURE	PRV	PRESSURE REDUCING VALVE	VB	VACUUM BREAKER
BV	BALL VALVE	FS	FLOOR SINK			PSIA	POUNDS PER SQUARE INCH ABSOLUTE	VEL	VELOCITY
		FSD	FIRE/SMOKE DAMPER	MAT	MIXED AIR TEMPERATURE	PSIG	POUNDS PER SQUARE INCH GAUGE	VTR	VENT THROUGH ROOF
DB	DRY BULB	FT	FEET	MAX	MAXIMUM			VFD	VARIABLE FREQUENCY DRIVE
DDC	DIRECT DIGITAL CONTROL	FT^2	SQUARE FEET	MBD	MANUAL BALANCING DAMPER	QTY	QUANTITY		
DIA	DIAMETER	FT^3	CUBIC FEET	MBH	1,000 BTU PER HOUR			W	WATTS
DIFF	DIFFUSER			MCC	MOTOR CONTROL CENTER	RA	RETURN AIR	WB	WET BULB
DN	DOWN	GA	GAUGE	MD	MOTORIZED DAMPER	RH	RELATIVE HUMIDITY	WC	WATER COLUMN
DWGS	DRAWINGS	GAL	GALLONS	MFR	MANUFACTURER	RPM	REVOLUTIONS PER MINUTE	WG	WATER GAUGE
DX	DIRECT EXPANSION	GALV	GALVANIZED			RTU	ROOFTOP UNIT	WH	WATER HEATER
								WPD	WATERSIDE PRESSURE DROP

GENERAL MECHANICAL NOTES

(APPLICABLE TO ALL MECHANICAL DRAWINGS)

A. PLANS SHOW AIR DEVICES IN COORDINATION WITH REFLECTED CEILING PLANS. VERIFY CEILING TYPES BEFORE ORDERING AIR DEVICES.
B. REFER TO REFLECTED CEILING PLANS FOR EXACT LOCATION OF AIR DEVICES.
C. PROVIDE SOUND ELBOW FOR ALL CEILING RETURN/TRANSFER AIR GRILLES, UNLESS NOTED OTHERWISE.
D. WHERE CEILING SPACE IS USED AS A RETURN AIR PLENUM, AIR TRANSFER OPENINGS ARE TO BE INSTALLED IN ALL WALLS EXTENDED TO STRUCTURE. THE DRAWINGS MY NOT SHOW ALL SUCH WALLS. PROVIDE OPENINGS AT 500 FPM IN FULL HEIGHT WALLS TO ENSURE RETURN AIR PATH. INSTALL FIRE DAMPERS IN OPENINGS AT FIRE RATED WALLS. SEE ARCHITECTURAL PLANS FOR RATED WALLS.
E. SEE DUCT SPECIFICATIONS FOR SPECIFIC AND GENERAL MATERIALS AND REQUIREMENTS.
F. ALL RECTANGULAR SQUARE ELBOWS SHALL BE PROVIDED WITH INTERNAL TURNING VANES.
G. VERIFY ACTUAL CONDITIONS ON SITE BEFORE BID.
H. IN HARD CEILINGS AND WALLS, PROVIDE 24"x24" ACCESS PANELS FOR ALL VAV BOXES, EXHAUST FANS, VALVES, FIRE DAMPERS, BALANCING DAMPERS, CONTROL DEVICES, AND ALL OTHER DEVICES THAT REQUIRE MAINTENANCE.
I. ALL MATERIALS ON PLANS ARE NEW, UNLESS INDICATED OTHERWISE.
J. INSTALL FLEXIBLE DUCT CONNECTIONS BETWEEN DUCTWORK AND ANY EQUIPMENT CONTAINING A MOTOR (NO EXCEPTIONS).
K. ALL DUCT SIZES SHOWN ON THE DRAWINGS ARE CLEAR INSIDE DIMENSIONS. INCREASE SIZE OF DUCTS IF ACOUSTIC LINING IS SCHEDULED OR SPECIFIED.
L. AVOID INSTALLING THERMOSTATS ON EXTERIOR WALLS OR EXTERIOR METAL COLUMNS. IF NOT AVOIDABLE, INSTALL THERMOSTATS ON INSULATING BASE.
M. WHERE CONFLICTS OCCUR BETWEEN THE CONTRACT DRAWINGS, SPECIFICATIONS, FIELD CONDITIONS AND /OR THE BUILDING CODES, THE MOST STRINGENT REQUIREMENTS SHALL APPLY, IN THE SOLE JUDGEMENT OF THE ARCHTECT/ENGINEER.
N. MECHANICAL WORK ON OR THROUGH ROOF TO SHOW MINIMUM STANDARD OF REQUIREMENTS. ALL WORK SHALL BE MADE IN STRICT ACCORDANCE WITH ROOF MANUFACTURER'S REQUIREMENTS AND DETAILS, SO THAT ROOF WARRANTY CLEARLY INCLUDES ALL WORK RELATED TO MECHANICAL COMPONENTS.
O. INSTALL ALL EQUIPMENT, BASES AND CURBS LEVEL. PROVIDE COMPENSATION WHERE SURFACES HAVE SLOPE.
P. THESE DRAWINGS ARE SCHEMATIC IN NATURE AND ARE NOT INTENDED TO SHOW ALL POSSIBLE CONDITIONS. IT IS INTENDED THAT A COMPLETE MECHANICAL SYSTEM BE PROVIDED WITH ALL NECESSARY EQUIPMENT, APPURTENANCES, AND CONTROLS COMPLETELY COORDINATED WITH ALL DISCIPLINES. ALL PARAMETERS GIVEN IN THESE DOCUMENTS SHALL BE STRICTLY CONFORMED TO ANY ITEMS AND LABOR REQUIRED FOR A COMPLETE MECHANICAL SYSTEM IN ACCORDANCE WITH ALL APPLICABLE CODES, STANDARDS, LOCAL AUTHORITIES, AND THESE CONTRACT DOCUMENTS SHALL BE FURNISHED WITHOUT INCURRING ANY ADDITIONAL COST TO THE OWNER. CAREFULLY REVIEW ALL CONTRACT DOCUMENTS AND THE DESIGN OF OTHER TRADES.
Q. COORDINATE ALL WORK WITH ARCHITECTURAL, STRUCTURAL, FIRE PROTECTION, PLUMBING AND ELECTRICAL TRADES. PROVIDE ALL OFFSETS, ETC. TO AVOID INTERFERENCE WITH EQUIPMENT, PIPING, DUCTWORK, LIGHTS, CONDUIT, ETC.
R. PRODUCTS, MANUFACTURERS AND MODEL NUMBERS FOR EQUIPMENT INDICATE A BASIS FOR DESIGN BUT ARE NOT LIMITED TO THE PRODUCTS SPECIFED. SUBSTITUTION OF PRODUCTS MUST COMPLY OR EXCEED THE REQUIREMENTS DESIGNATED IN THE SPECIFICATIONS AND DRAWINGS.
R. ALL BACKDRAFT DAMPERS SHALL BE COUNTERBALANCED TYPE WITH ADJUSTABLE WEIGHTS AND VINYL SEALS, UNLESS NOTED OTHERWISE, SIMILAR TO RUSKIN CBD2. MINIMUM DAMPER PERFORMANCE SHALL INCLUDE A BLADE REACTION AT 0.01" W.G. AND A MAXIMUM LEAKAGE OF 15 CFM/SF AT 1" W.G.
S. MOTORIZED OUTDOOR AIR DAMPERS SHALL BE RATED AT 4 CFM/SF AT 1.0" W.G. WHEN TESTED ACCORDING TO AMCA STANDARD 500-1988.
T. SEE ARCHITECTURAL DRAWINGS FOR INFORMATION ON PATCHING AND REPAIR OF ALL SURFACES ALTERED BY MECHANICAL AND ELECTRICAL RENOVATIONS.
U. PROVIDE AND INSTALL CLEANOUT PLUGS IN CONDENSATE DRAIN LINES AT ALL HORIZONTAL AND VERTICAL CHANGES IN DIRECTION , AS SHOWN ON DRAWINGS AND AS REQUIRED BY CODE.

TAGS & DETAIL REFERENCES

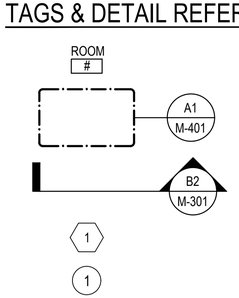

ROOM NAME
ROOM NUMBER

DETAIL NUMBER
SHEET NUMBER

SECTION NUMBER
SHEET NUMBER

KEYED NOTE

DEMOLITION
KEYED NOTE

FINAL

WHPacific
6501 Americas Pkwy NE, Suite 400
Albuquerque, NM 87110
505.247.0294 Fax 505.242.4845
www.whpacific.com

PAMELA M SALAZAR LEWIN
NEW MEXICO
14255
PROFESSIONAL ENGINEER
10.8.18

REVISIONS & ADDENDUMS

#	DATE	REMARKS

DRAWING INFO.	
DESIGNED	PL
DRAWN	CGA
CHECKED	PL
APPROVED	
LAST EDIT	
PLOT DATE	
SUBMITTAL	6/29/18

DRAWING SCALE AS NOTED

MECHANICAL LEGENDS & GENERAL NOTES

CITY OF LAS VEGAS, NEW MEXICO
UTILITIES OFFICE BUILDING RENOVATION - PHASE I

PROJECT NUMBER P0020657W.1
DRAWING FILE NAME P0020657W.1-M-001.DWG

SHEET NUMBER
M-001

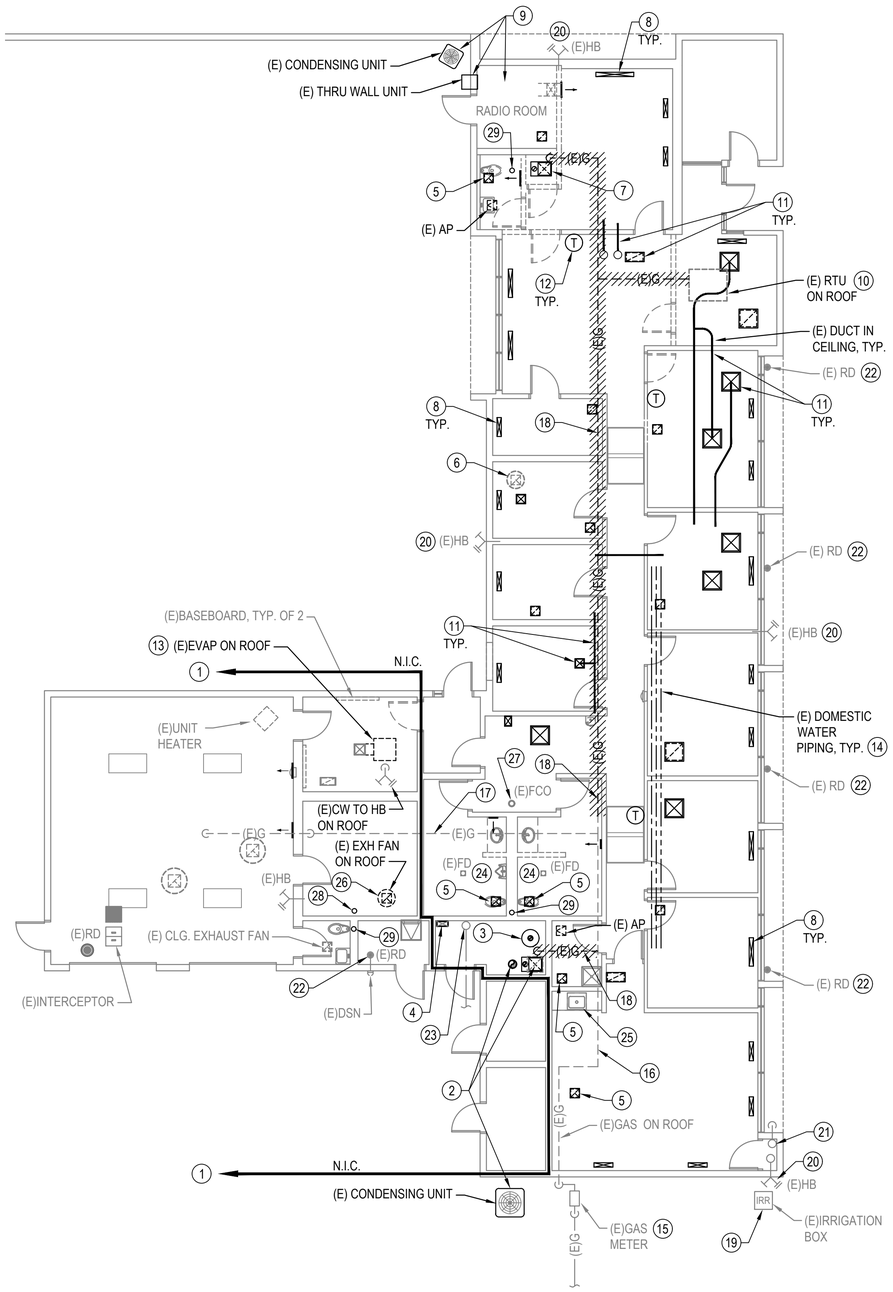

A1 DEMOLITION MECHANICAL PLAN

SCALE: 1/8" = 1'-0"

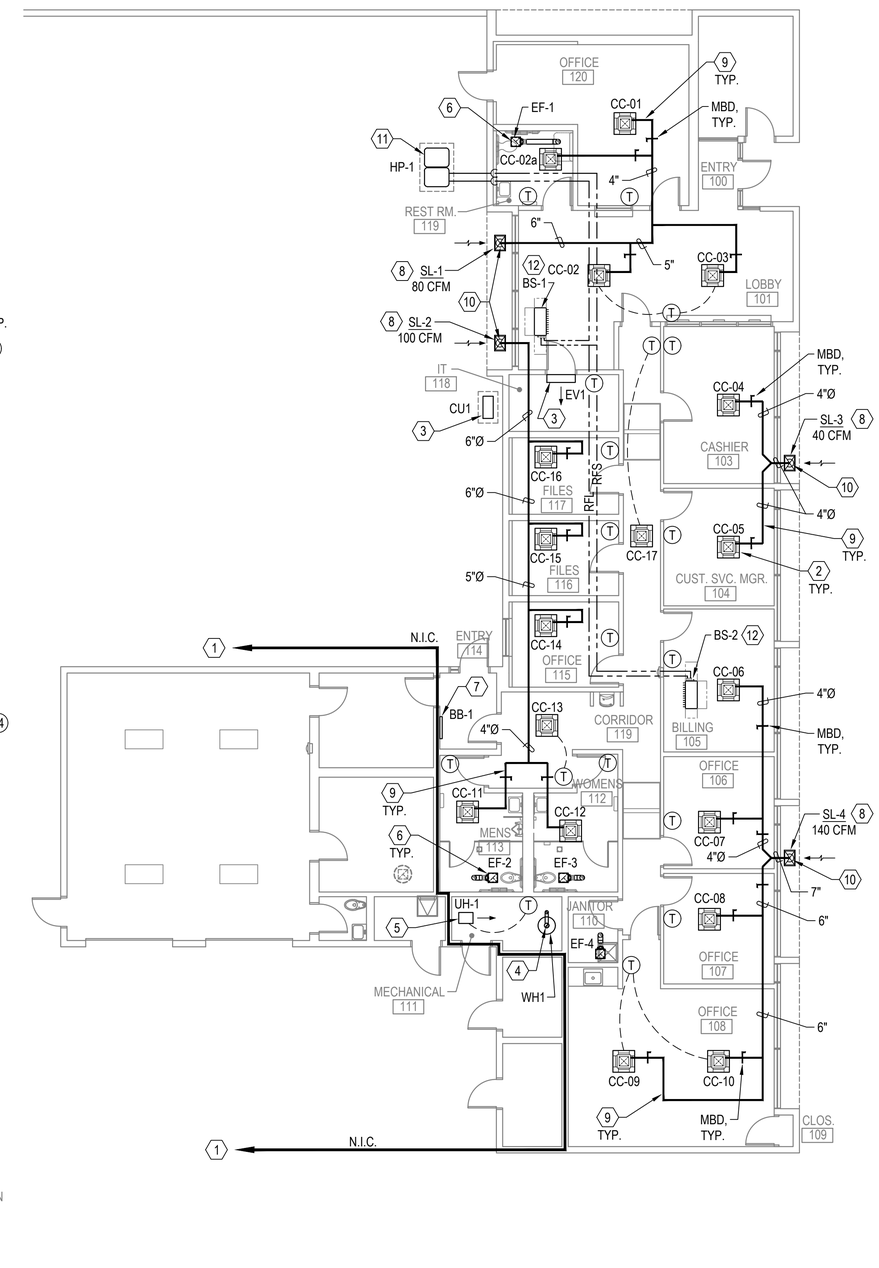

A3 NEW MECHANICAL PLAN

SCALE: 1/8" = 1'-0"

KEYED NOTES, cont. (X)

9. 4" OSA DUCT, CONNECT TO OUTDOOR AIR INTAKE AT CEILING CASSETTE PER MANUFACTURER'S REQUIREMENTS. BALANCE OSA TO CFM LISTED IN CEILING CASSETTE SCHEDULE ON SHEET M-601.
10. CONNECT ROUND SHEET METAL OSA DUCT TO FULL-SIZE SHEET METAL PLENUM AT SOFFIT LOUVER.
11. INSTALL HEAT PUMP PER MANUFACTURER'S REQUIREMENTS AND PER DETAIL A4/M-501.
12. INSTALL BRANCH SELECTOR ABOVE CEILING PER MANUFACTURER'S REQUIREMENTS AND ROUTE REFRIGERANT PIPING TO CEILING CASSETTE UNITS.

GENERAL NOTES

A. SEE SHEET M-001 FOR MECHANICAL LEGENDS AND GENERAL NOTES.
B. SEE SHEET M-501 FOR MECHANICAL DETAILS.
C. SEE SHEET M-601 FOR MECHANICAL SCHEDULES.
D. CONTRACTOR TO FIELD VERIFY ALL EXISTING CONDITIONS PRIOR TO START OF WORK. RECORD, DOCUMENT AND REPORT ANY CONDITIONS THAT VARY FROM DRAWINGS TO ENGINEER.

DEMOLITION NOTES (X)

1. EXISTING HVAC AND PLUMBING SYSTEMS TO WEST OF THE INDICATING LINE ARE TO REMAIN AND BE PROTECTED DURING CONSTRUCTION, UNO. COORDINATE WITH ALL DISCIPLINES.
2. REMOVE FURNACE, FURNACE SUPPORT STAND, FLUE, CONDENSING UNIT AND GOOSENECK ON ROOF COMPLETE. SEAL OPENING IN FLOOR PER ARCHITECTURAL.
3. REMOVE WATER HEATER, FLUE, ASSOCIATED PIPING AND RECIRC PUMP COMPLETE.
4. REMOVE COMBUSTION AIR DUCT. SEAL OPENINGS IN CEILING AND ROOF PER ARCHITECTURAL PLANS.
5. REMOVE CEILING EXHAUST FAN AND ASSOCIATED GOOSENECK ON ROOF.
6. REMOVE EXISTING EXHAUST FAN ON ROOF AND ASSOCIATED DUCTWORK AND GRILLES.
7. REMOVE FURNACE, FURNACE SUPPORT STAND, FLUE AND GOOSENECK ON ROOF COMPLETE. SEAL OPENING IN FLOOR PER ARCHITECTURAL.
8. REMOVE FLOOR REGISTER AND SEAL OPENING IN FLOOR PER ARCHITECTURAL.
9. REMOVE CONDENSER, THROUGH-THE-WALL UNIT AND ALL DUCTWORK AND HVAC EQUIPMENT WITHIN THE RADIO ROOM.
10. REMOVE ROOFTOP UNIT AND ASSOCIATED DUCTWORK, CONTROLS COMPLETE.
11. REMOVE DUCTWORK WITHIN BUILDING ENVELOPE AND ALL DIFFUSERS, GRILLES AND REGISTERS COMPLETE. NOTE: NOT ALL DUCTWORK IS INDICATED ON PLAN.
12. REMOVE THERMOSTAT AND WIRING COMPLETE.
13. REMOVE EVAP COOLER, DUCTWORK AND ASSOCIATED WATER PIPING ON ROOF COMPLETE IN PREPARATION FOR REROOFING.
14. REMOVE DOMESTIC CW, HW AND HWR RECIRC PIPING WITHIN BUILDING COMPLETE.
15. GAS METER AND GAS PIPING TO ROOF TO REMAIN.
16. GAS PIPING ON ROOF TO REMAIN, U.N.O.
17. GAS PIPING TO HIGH ROOF AREA TO REMAIN.
18. REMOVE GAS PIPING ON ROOF SHOWN HATCHED, AND REMOVE ASSOCIATED GAS PIPING WITHIN BUILDING.
19. IRRIGATION BOX AND PIPING TO REMAIN.
20. HOSE BIBB TO REMAIN.
21. INTERIOR AND EXTERIOR ROOF DRAIN PIPING TO REMAIN.
22. ROOF DRAIN BODY AND STRAINER TO REMAIN FOR REUSE. PRESERVE AND PROTECT DURING REROOFING. ROOF DRAIN PIPING WITHIN BUILDING AND BELOW GRADE TO REMAIN, PROTECT DURING CONSTRUCTION.
23. WATER ENTRANCE TO BUILDING TO REMAIN FOR REUSE.
24. FLOOR DRAIN TO REMAIN.
25. COUNTER SINK AND ASSOCIATED WASTE TAILPIECE, TRAP AND WASTE PIPING AND VENT TO REMAIN. DEMO ASSOCIATED WATER PIPING AND WALL STOP VALVES.
26. REMOVE EXHAUST FAN ON ROOF TO ACCOMMODATE REROOFING WORK AND REINSTALL IN PLACE.
27. EXISTING SANITARY FLOOR CLEANOUT TO REMAIN. SANITARY WASTE PIPING BELOW FLOOR TO REMAIN AND TO BE PROTECTED FOR REUSE. VERIFY THAT WASTE PIPING BELOW FLOOR AND EXTERIOR TO BUILDING IS FUNCTIONAL. NOTIFY ENGINEER OF ANY DRAINAGE ISSUES.
28. REMOVE FLUE THROUGH ROOF TO ACCOMMODATE REROOFING WORK AND REINSTALL IN PLACE AND RECONNECT TO EXISTING APPLIANCE.
29. PLUMBING VENT THROUGH ROOF. AFTER RE-ROOFING, INSTALL NEW PIPE BOOT PER DETAIL C4/P-501. AND EXTEND VENT TO 24" ABOVE ROOF.

KEYED NOTES (X)

1. EXISTING HVAC AND PLUMBING SYSTEMS TO WEST OF THE INDICATING LINE ARE TO REMAIN AND BE PROTECTED DURING CONSTRUCTION, UNO. COORDINATE WITH ALL DISCIPLINES.
2. INSTALL CEILING CASSETTE PER MANUFACTURER'S REQUIREMENTS. SEE SHEET P-102 FOR CONDENSATE DRAIN PIPING.
3. INSTALL SPLIT SYSTEM PER MANUFACTURER'S REQUIREMENTS AND PER DETAIL SHEET C4/M-501.
4. DIRECT VENT FROM WATER HEATER THROUGH ROOF, SEE DETAIL A1/P-501.
5. SUPPORT UNIT HEATER WITH WALL BRACKET AND CONTROL BY LINE VOLTAGE THERMOSTAT.
6. CEILING EXHAUST FAN, SEE DETAIL C3/M-501.
7. FLOOR MOUNT BASEBOARD HEATER WITH INTEGRAL THERMOSTAT.
8. INSTALL OSA SOFFIT LOUVER IN BOTTOM OF EAVE, COORDINATE WITH ARCHITECTURAL.

0 4' 8' 16'

SCALE:1/8"=1'

FINAL

WHPacific
6501 Americas Pkwy NE, Suite 400
Albuquerque, NM 87110
505.247.0294 Fax 505.242.4845
www.whpacific.com

PAMELA M SALAZAR-LENTZ
NEW MEXICO
14255
PROFESSIONAL ENGINEER
10.8.18

REVISIONS & ADDENDUMS			
#	DATE	REMARKS	

DRAWING INFO.	
DESIGNED	PL
DRAWN	CGA
CHECKED	PL
APPROVED	
LAST EDIT	
PLOT DATE	
SUBMITTAL	6/29/18

DRAWING SCALE AS NOTED

DEMOLITION AND NEW MECHANICAL PLANS

CITY OF LAS VEGAS, NEW MEXICO
UTILITIES OFFICE BUILDING RENOVATION - PHASE I

PROJECT NUMBER P002065/W.1
DRAWING FILE NAME P002065/W.1-M-101.DWG

SHEET NUMBER
M-101

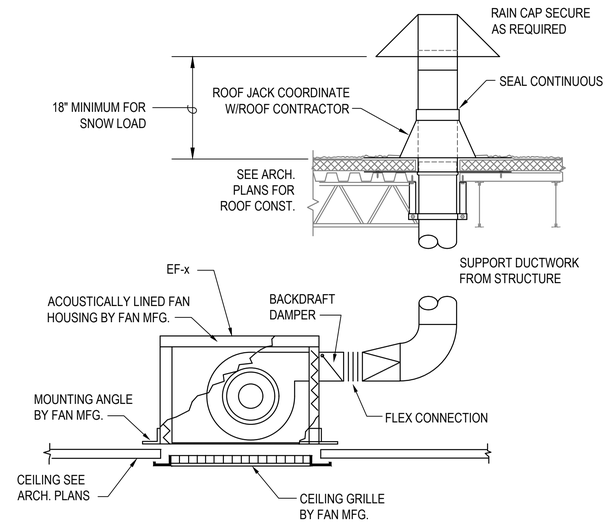

C3 CEILING EXHAUST FAN DETAIL

NO SCALE

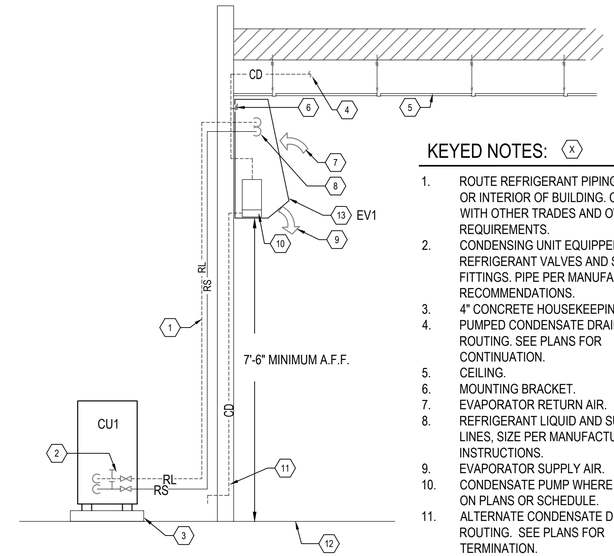

KEYED NOTES: (X)

1. ROUTE REFRIGERANT PIPING EXTERIOR OR INTERIOR OF BUILDING. COORDINATE WITH OTHER TRADES AND OWNER REQUIREMENTS.
2. CONDENSING UNIT EQUIPPED WITH REFRIGERANT VALVES AND SCHRADER FITTINGS. PIPE PER MANUFACTURER'S RECOMMENDATIONS.
3. 4" CONCRETE HOUSEKEEPING PAD.
4. PUMPED CONDENSATE DRAIN LINE ROUTING. SEE PLANS FOR CONTINUATION.
5. CEILING.
6. MOUNTING BRACKET.
7. EVAPORATOR RETURN AIR.
8. REFRIGERANT LIQUID AND SUCTION LINES, SIZE PER MANUFACTURER'S INSTRUCTIONS.
9. EVAPORATOR SUPPLY AIR.
10. CONDENSATE PUMP WHERE SPECIFIED ON PLANS OR SCHEDULE.
11. ALTERNATE CONDENSATE DRAIN LINE ROUTING. SEE PLANS FOR TERMINATION.
12. FINISH FLOOR.
13. WALL MOUNTED EVAPORATOR UNIT.

C4 SPLIT SYSTEM DETAIL

NO SCALE

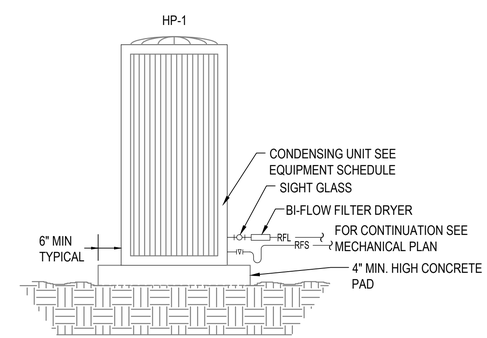

NOTE: INSTALL PER MFG. REQUIREMENTS.

A4 CONDENSER ON PAD DETAIL

NO SCALE

FINAL

WHPacific
6501 Americas Pkwy NE, Suite 400
Albuquerque, NM 87110
505.247.0294 Fax 505.242.4845
www.whpacific.com

PAMELA M SALAZAR LENTZ
NEW MEXICO
14255
REGISTERED PROFESSIONAL ENGINEER
10.8.18

REVISIONS & ADDENDUMS		
#	DATE	REMARKS

DRAWING INFO.	
DESIGNED	PL
DRAWN	CGA
CHECKED	PL
APPROVED	
LAST EDIT	
PLOT DATE	
SUBMITTAL	6/29/18

MECHANICAL DETAILS

CITY OF LAS VEGAS, NEW MEXICO
UTILITIES OFFICE BUILDING RENOVATION - PHASE I

DRAWING SCALE
AS NOTED

PROJECT NUMBER P002065TW.1
DRAWING FILE NAME P002065TW.1-M-501.DWG

SHEET NUMBER
M-501

HEAT PUMP UNIT SCHEDULE

SYMBOL	SERVICE	COOLING CAPACITY (MBH)	HEATING CAPACITY (MBH)	WEIGHT LBS	AMBIENT TEMP (DEG F) SUMMER/WINTER	IEER	ELECTRICAL			MANUFACTURER / MODEL NO.	REMARKS
							MCA	MOP	V/PH/HZ		
HP-1	BUILDING	144	162	800	105/15	24.2	55	70	208/3/60	DAIKIN / REYQ144	1,2,3,4

REMARKS:
1. OPERATING RANGE FOR HEATING 0 TO 77 DEG. F. OPERATING RANGE FOR COOLING 23 TO 122 DEG. F.
2. SIMULTANEOUS HEATING AND COOLING HEAT RECOVERY TYPE MODEL.
3. R-410
4. CAPACITY AT 6,400 FEET ABOVE SEA LEVEL.

BRANCH SELECTOR SCHEDULE

SYMBOL	ASSOCIATED CONDENSER	SERVICE	NOMINAL DIMENSIONS WxHxD (IN.)	ELECTRICAL				WEIGHT LBS.	REMARKS	BASIS OF DESIGN MANUFACTURER / MODEL No.
				VOLT	PH	Hz	MCA			
BS-1	HP-1	BUILDING	33x12x19	208	1	60	1.2	106	1-2	DAIKIN / BS12Q
BS-2			33x12x19	208	1	60	1.2	106	1-2	DAIKIN / BS12Q

REMARKS:
1. INSTALL BRANCH SELECTORS PER MANUFACTURER'S REQUIREMENTS.
2. INSTALL BRANCH SELECTORS ABOVE CEILINGS. PROVIDE CEILING ACCESS PANEL ON CONTROL SIDE

CEILING CASSETTE SCHEDULE

SYMBOL	ROOM SERVED	CFM HI/LO	OA CFM	COOLING		HEATING	ELECTRICAL			OPER. WT. LBS.	MANUFACTURER / MODEL	REMARKS
				TOTAL MBH	SENS MBH	TOTAL MBH	VOLT/Ø	MCA	MOCP			
CC-01	OFFICE 127	320/247	20	9,500	6,800	11,100	208/1	0.8	15.0	48	DAIKIN / FXZQ09	1,2,3,5,6
CC-02	LOBBY 101	320/247	20	7,500	5,900	8,700	208/1	0.8	15.0	48	DAIKIN / FXZQ07	1,2,3,4,6
CC-02a	REST RM. 126	320/247	20	7,500	5,900	8,700	208/1	0.8	15.0	48	DAIKIN / FXZQ07	1,2,3,4,6
CC-03	LOBBY 101	320/247	20	7,500	5,900	8,700	208/1	0.8	15.0	48	DAIKIN / FXZQ07	1,2,3,4,6
CC-04	CASHIER 102	320/247	20	7,500	5,900	8,700	208/1	0.8	15.0	48	DAIKIN / FXZQ07	1,2,3,4,6
CC-05	CUST. SVC. MGR. 103	320/247	20	7,500	5,900	8,700	208/1	0.8	15.0	48	DAIKIN / FXZQ07	1,2,3,4,6
CC-06	BILLING 104	320/247	20	7,500	5,900	8,700	208/1	0.8	15.0	48	DAIKIN / FXZQ07	1,2,3,4,6
CC-07	OFFICE 105	320/247	20	7,500	5,900	8,700	208/1	0.8	15.0	48	DAIKIN / FXZQ07	1,2,3,4,6
CC-08	OFFICE 106	320/247	20	7,500	5,900	8,700	208/1	0.8	15.0	48	DAIKIN / FXZQ07	1,2,3,4,6
CC-09	OFFICE 107	320/247	40	9,500	6,800	11,100	208/1	0.8	15.0	48	DAIKIN / FXZQ09	1,2,3,5,6
CC-10	OFFICE 107	320/247	40	9,500	6,800	11,100	208/1	0.8	15.0	48	DAIKIN / FXZQ09	1,2,3,5,6
CC-11	MENS 120	320/247	20	7,500	5,900	8,700	208/1	0.8	15.0	48	DAIKIN / FXZQ07	1,2,3,4,6
CC-12	WOMENS 121	320/247	20	7,500	5,900	8,700	208/1	0.8	15.0	48	DAIKIN / FXZQ07	1,2,3,4,6
CC-13	CORRIDOR 119	320/247	N/A	7,500	5,900	8,700	208/1	0.8	15.0	48	DAIKIN / FXZQ07	1,2,3,4,6
CC-14	OFFICE 122	320/247	20	7,500	5,900	8,700	208/1	0.8	15.0	48	DAIKIN / FXZQ07	1,2,3,4,6
CC-15	OFFICE 123	320/247	20	7,500	5,900	8,700	208/1	0.8	15.0	48	DAIKIN / FXZQ07	1,2,3,4,6
CC-16	OFFICE 124	320/247	20	7,500	5,900	8,700	208/1	0.8	15.0	48	DAIKIN / FXZQ07	1,2,3,4,6
CC-17	HALLWAY	320/247	N/A	9,500	6,800	11,100	208/1	0.8	15.0	48	DAIKIN / FXZQ09	1,2,3,5,6

REMARKS:
1. 2' x 2' NOMINAL RECESSED SIZE, 4-WAY CEILING CASSETTE.
2. INTEGRAL CONDENSATE PUMP WITH CAPACITY OF 21.5" LIFT.
3. CONDENSATE PIPE CONNECTION: 1-1/32".
4. SOUND PRESSURE (HI/LO) IN dBA: 31/29.
5. SOUND PRESSURE (HI/LO) IN dBA: 33/29.
6. WIRED REMOTE, WALL-MOUNTED, CONTROLLER.

SOFFIT LOUVER SCHEDULE

SYMBOL	LOCATION	FUNCTION	BASIS OF DESIGN MANUFACTURER	MODEL	TYPE	AIRFLOW (CFM)	WIDTH x LENGTH IN.	NET FREE AREA %	MATERIAL	REMARKS
SL-1	SEE PLAN	OSA INTAKE	GREENHECK	ESJ-202	STATIONARY	80	12x18	25	ALUMINUM	1-3
SL-2	SEE PLAN	OSA INTAKE	GREENHECK	ESJ-202	STATIONARY	100	12x18	25	ALUMINUM	1-3
SL-3	SEE PLAN	OSA INTAKE	GREENHECK	ESJ-202	STATIONARY	40	12x18	25	ALUMINUM	1-3
SL-4	SEE PLAN	OSA INTAKE	GREENHECK	ESJ-202	STATIONARY	140	12x18	25	ALUMINUM	1-3

REMARKS:
1. PROVIDE WITH FLANGED FRAME AND ALUMINUM INSECT SCREEN.
2. LOUVER THICKNESS: 2"
3. COLOR AND FINISH PER ARCHITECT.

EXHAUST FAN SCHEDULE

UNIT SYMBOL	SERVICE	TYPE	MANUFACT	MODEL	FLOW (CFM)	ESP (IN.WG)	DRIVE TYPE	RPM	HP OR WATTS	VOLT	PH	OPERATING WEIGHT (LB)	REMARKS
EF-1	REST RM. 126	CEILING	GREENHECK	SP-B90	75	0.20	DIRECT	700	21.1	115	1	10	1,2,3
EF-2	MENS 120	CEILING	GREENHECK	SP-A190	200	0.20	DIRECT	1400	54.2	115	1	17	1,2,3
EF-3	WOMENS 121	CEILING	GREENHECK	SP-A190	200	0.20	DIRECT	1400	54.2	115	1	17	1,2,3
EF-4	JANITOR 111	CEILING	GREENHECK	SP-B90	75	0.20	DIRECT	700	21.1	115	1	10	2,3,4

REMARKS:
1. CONTROL BY OCCUPANCY SENSOR, SEE ELECTRICAL.
2. PROVIDE WITH BACKDRAFT DAMPER.
3. PROVIDE WITH ROOF CAP.
4. CONTROL BY WALL SWITCH, SEE ELECTRICAL.

SPLIT SYSTEM SCHEDULE

EVAPORATOR							CONDENSING UNIT								GENERAL		
SYMBOL	SEER	MCA	AIR FLOW	NOMINAL CAPACITY	OPER. WT.	EAT DB/WB	SYMBOL	VOLT/Ø	MCA	FUSE	TOTAL MBH	AMB. TEMP.	REFRIGERANT	OPER. WT.	SERVICE LOCATION	MANUFACTURER EVAP / COND	REMARKS
EV1	15.3	1.0	320	1.5 TONS	30	80/67	CU1	208/1Ø	13	15	18	95	R410A	90	IT ROOM	MITSUBISHI PKA-A18HA4 / PUY-A18NHA4	1, 2, 3, 5, 6

REMARKS:
1. PROVIDE WITH THERMAL OVERLOADS AND DISCONNECT.
2. LOW AMBIENT KIT, CRANKCASE HEATERS.
3. HAIL GUARDS.
4. BACK-UP (EMERGENCY POWER) SOURCE.
5. WALL HUNG, UNDER CEILING EVAPORATOR.
6. WITH CONDENSATE PUMP, MIN. 2 FT. HEAD.

UNIT HEATER - ELECTRIC

GENERAL						ELECTRIC					REMARKS
UNIT SYMBOL	SERVICE	MANUF.	MODEL	TYPE	FLOW SL (CFM)	KW	VOLT	PH	HZ	AMPS	
UH-1	MECHANICAL	QMARK	MUH03	VERTICAL	350	3	208	1	60	14.5	1,2,3

REMARKS:
1. UNIT MOUNTED THERMOSTAT AND DISCONNECT. INSTALL PER MANUFACTURER'S INSTRUCTIONS.
2. PROVIDE WITH WALL BRACKET.
3. WEIGHT: 30 LBS.

BASEBOARD SCHEDULE

GENERAL						ELECTRIC					REMARKS
UNIT SYMBOL	SERVICE	MANUF.	MODEL	TYPE	BTUH	WATTS	VOLT	PH	HZ	AMPS	
BB-1	ENTRY 118	QMARK	CBD500	FLOOR MOUNT	1706	500	120	1	60	4.2	1,2

REMARKS:
1. HEAVY DUTY CONSTRUCTION WITH FRONT COVER OF 16 GAUGE COLD ROLLED STEEL. LENGTH: 28"
2. PROVIDE WITH BUILT-IN DOUBLE POLE TAMPER RESISTANT THERMOSTAT KIT, MODEL HBBT2TP.

FINAL

WHPacific
6501 Americas Pkwy NE, Suite 400
Albuquerque, NM 87110
505.247.0294 Fax 505.242.4845
www.whpacific.com

PAMELA M SALAZAR LENTZ
NEW MEXICO
14255
PROFESSIONAL ENGINEER
10-8-18

REVISIONS & ADDENDUMS		
#	DATE	REMARKS

DRAWING INFO.	
DESIGNED	PL
DRAWN	CGA
CHECKED	PL
APPROVED	
LAST EDIT	
PLOT DATE	
SUBMITTAL	6/29/18

DRAWING SCALE: AS NOTED

MECHANICAL SCHEDULES

CITY OF LAS VEGAS, NEW MEXICO
UTILITIES OFFICE BUILDING RENOVATION - PHASE I

PROJECT NUMBER: P0020657W.1
DRAWING FILE NAME: P0020657W.1-M-601.DWG

SHEET NUMBER
M-601

PLUMBING LEGEND

NOTE: NOT ALL SYMBOLS USED ON THIS PROJECT

	FLEXIBLE CONNECTION		PRESSURE GAUGE W/GAUGE COCK	CD	CONDENSATE DRAIN		POINT OF NEW CONNECTION TO EXISTING
	SOIL, WASTE OR SANITARY SEWER		THERMOMETER (SPECIFY TYPE)		HOSE BIBB		FLOOR DRAIN / FD
	VENT-SANITARY	G	GAS PRESSURE REGULATOR		TRAP PRIMER , TP	GT	GREASE TRAP LINE
D	GRAVITY DRAIN, CONDENSATE		PRESSURE REDUCING VALVE		OUTSIDE SCREW AND YOKE VALVE		BACKFLOW PREVENTER
	COLD WATER CW		TEMPERATURE and PRESSURE RELIEF VALVE	X	KEYED NOTE		GAS PRESSURE REGULATOR/METER ASSEMBLY
	HOT WATER OR 140° HW (HI TEMP), AS INDICATED		PRESSURE-TEMPERATURE RELIEF VALVE IN RISER		FLOOR SINK , FS		CHECK VALVE
	HOT WATER RETURN OR 140° HWR (HI TEMP), AS INDICATED	FS	FLOW SWITCH	G	NATURAL GAS LINE	RD	ROOF DRAIN LINE
	GREASE INTERCEPTOR, G-INT		DIRECTION OF SLOPE		BALL VALVE	ORD	OVERFLOW ROOF DRAIN LINE
LP	LIQUID PROPANE GAS- PRESSURE AS IND.		FLOW-IN DIRECTION OF ARROW		WATER HAMMER ARRESTOR WHA WITH BALL VALVE		CAPPED PIPE
	GATE VALVE		VALVE IN RISER (TYPE AS SPECIFIED OR NOTED)	LP	LIQUIFIED PETROLEUM LINE		BUTTERFLY VLAVE
	CONCENTRIC REDUCER		RISER DOWN (ELBOW)	CO	CLEAN-OUT TO GRADE WITH CONCRETE COLLAR		NEEDLE VALVE
	ECCENTRIC REDUCER		RISER UP (ELBOW)		TWO-WAY CLEAN-OUT TO GRADE WITH CONCRETE COLLAR	S	ELECTRIC SOLENOID OPERATER VALVE
	UNION (SCREWED)		RISE OR DROP	RD	ROOF DRAIN AND ITS SIZE		GLOBE VALVE
	PIPE FLANGE		BRANCH-TOP CONNECTION	WCO	WALL CLEAN-OUT		STRAINER
	HOSE BIBB OR WALL HYDRANT		BRANCH-BOTTOM CONNECTION	FCO	FLOOR CLEAN-OUT		AIR VENT
	UNDERGROUND VALVE WITH VALVE BOX EXTENDED TO FINISHED GRADE		BRANCH-SIDE CONNECTION		STRAINER W/DRAIN VALVE AND CAP		THREE-WAY CONTROL VALVE
		AP	ACCESS PANEL		UNIVERSAL TEMP AND PRESS TEST CONN.	LT1	LINT TRAP, LT1
	GAS COCK, GAS STOP	VTR	VENT THROUGH ROOF				
	BALANCING COCK		FLOOR CLEAN OUT , FCO				
	BACKWATER VALVE		TWO-WAY CONTROL VALVE				
CO	CLEAN-OUT PLUG						

PLUMBING ABBREVIATIONS

NOTE: NOT ALL ABBREVIATIONS USED ON THIS PROJECT

AAV	AUTOMATIC AIR VENT	CV	CHECK VALVE	GPF	GALLONS PER FLUSH	PD	CONDENSATE DRAIN (PUMPED)
AC	AIR CONDITIONING	CW	COLD WATER	GPH	GALLONS PER HOUR	PRV	PRESSURE REGULATING VALVE
AD	AREA DRAIN			GPM	GALLONS PER MINUTE	PSI	POUNDS PER SQUARE INCH
AFF	ABOVE FINISHED FLOOR	D	DRAIN (GRAVITY)	GI or GT	GREASE INTERCEPTOR or GREASE TRAP		
AFG	ABOVE FINISHED GRADE	DCO	DOUBLE CLEANOUT (TWO WAY)			RPBP	REDUCED PRESSURE BACKFLOW PREVENTER
AP	ACCESS PANEL	DD	DECK DRAIN	HB	HOSE BIBB	RPM	REVOLUTIONS PER MINUTE
ARCH	ARCHITECT or ARCHITECTURAL	DFU	DRAINAGE FIXTURE UNITS	HP	HORSE POWER		
		DIA	DIAMETER	HR	HOUR	SF	SQUARE FEET
B/C	BELOW CEILING	DN	DOWN	HVAC	HEATING, VENTILATING & AIR CONDITIONING		
BCO	BASE CLEANOUT	DSN	DOWNSPOUT NOZZLE	HW	HOT WATER (DOMESTIC)	T&P	TEMPERATURE & PRESSURE
BFF	BELOW FINISHED FLOOR			HWR	HOT WATER RECIRCULATION (DOMESTIC)	TW	TEMPERED WATER
BFG	BELOW FINISHED GRADE	(E)	EXISTING			TYP	TYPICAL
BFP	BACKFLOW PREVENTER	EL/ELEV	ELEVATION	ID	INSIDE DIMENSION		
BOP	BOTTOM OF PIPE	ENG	ENGINEER	IE	INVERT ELEVATION	U/F	UNDER FLOOR
BREAK	PIPING BREAK			IN	INCH	U/G	UNDERGROUND
BTU	BRITISH THERMAL UNIT	F	FAHRENHEIT	INV	INVERT	UNO	UNLESS NOTED OTHERWISE
BTUH	BRITISH THERMAL UNIT PER HOUR	FCO	FLOOR CLEANOUT				
BWV	BACKWATER VALVE	FD	FLOOR DRAIN	kPa	KILOPASCALS	V	VENT or VENT PIPE
		FF	FINISH FLOOR	kW	KILOWATT	VB	VACUUM BREAKER
C	CENTIGRADE	FS	FLOOR SINK			VTR	VENT THROUGH ROOF
CA	COMPRESSED AIR	FSW	FLOW SWITCH	LB	POUND		
CD	CONDENSATE DRAIN (GRAVITY)	FT	FEET	MFR	MANUFACTURER	W	WASTE or WASTE PIPE
CFH	CUBIC FEET PER HOUR	FU	FIXTURE UNITS	NC	NORMALLY CLOSED	WC	WATER COLUMN
CL	CENTER LINE			NO	NORMALLY OPEN	WCO	WALL CLEANOUT
CO	CLEANOUT	G	NATURAL GAS	NIC	NOT IN CONTRACT	WSFU	WATER SUPPLY FIXTURE UNITS
COP	CLEANOUT PLUG	CGO	GRADE CLEANOUT	OD	OUTSIDE DIAMETER		

GENERAL PLUMBING NOTES

(APPLICABLE TO ALL PLUMBING DRAWINGS)

A. THESE DRAWINGS ARE SCHEMATIC IN NATURE AND ARE NOT INTENDED TO SHOW ALL POSSIBLE CONDITIONS. IT IS INTENDED THAT A COMPLETE PLUMBING AND FIRE PROTECTION SYSTEM BE PROVIDED WITH ALL NECESSARY EQUIPMENT, APPURTENANCES, AND CONTROLS COMPLETELY COORDINATED WITH ALL DISCIPLINES. ALL PARAMETERS GIVEN IN THESE DOCUMENTS SHALL BE STRICTLY CONFORMED TO ANY ITEMS AND LABOR REQUIRED FOR A COMPLETE PLUMBING AND FIRE PROTECTION SYSTEM IN ACCORDANCE WITH ALL APPLICABLE CODES, STANDARDS, LOCAL AUTHORITIES, AND THESE CONTRACT DOCUMENTS SHALL BE FURNISHED WITHOUT INCURRING ANY ADDITIONAL COST TO THE OWNER. CAREFULLY REVIEW ALL CONTRACT DOCUMENTS AND THE DESIGN OF OTHER TRADES.

B. COORDINATE ALL WORK WITH ARCHITECTURAL, STRUCTURAL, FIRE PROTECTION, MECHANICAL AND ELECTRICAL TRADES. PIPE ROUTING SHOWN IS DIAGRAMMATIC. PROVIDE ALL OFFSETS, ETC., TO AVOID INTERFERENCE WITH EQUIPMENT, PIPING, DUCTWORK, LIGHTS, CONDUIT, ETC.

C. COORDINATE ALL FLOOR PENETRATIONS WITH STRUCTURAL DRAWINGS, SET SLEEVES IN FLOORS AND WALLS AND ATTACHMENTS FOR HANGERS AS CONSTRUCTION PROGRESSES. ALL PENETRATIONS MUST BE SEALED AND HELD AS TIGHT TO COLUMNS OR WALLS AS POSSIBLE.

D. PROVIDE 24" X 24" ACCESS PANELS FOR WATER HAMMER ARRESTORS, ALL VALVES LOCATED ABOVE NON-ACCESSIBLE CEILINGS AND INSIDE PIPE CHASES. EXACT LOCATION MUST BE COORDINATED WITH ARCHITECTURAL DRAWINGS AND APPROVED BY ARCHITECT PRIOR TO INSTALLATION.

E. ALL DRAINAGE PIPING SHALL BE CONCEALED INSIDE WALLS AND PIPE CHASES OR ABOVE CEILINGS. HOLD ALL PIPING ABOVE CEILING AS HIGH AS POSSIBLE.

F. WALL HYDRANTS AND HOSE BIBBS SHALL BE MOUNTED 24" ABOVE GRADE OR ABOVE FINISH FLOOR.

G. BOLT WATER HEATERS, PUMPS AND TANKS TO FLOOR SLABS OR CONCRETE PADS.

H. COORDINATE ALL UNDERGROUND PIPING WITH GRADE BEAMS, WALL FOOTINGS AND OTHER STRUCTURAL CONDITIONS.

I. REFER TO ARCHITECTURAL PLANS AND ELEVATIONS FOR LOCATION OF ALL PLUMBING FIXTURES. EXACT LOCATION OF ALL PLUMBING FIXTURES MUST BE VERIFIED IN FIELD PRIOR TO INSTALLATION. FINAL LOCATION SHALL BE AS DIRECTED BY ARCHITECT.

J. DO NOT RUN PLUMBING, PIPING OR FIRE PROTECTION PIPING THROUGH TRANSFORMER VAULTS, ELECTRICAL CLOSETS, ELECTRICAL SWITCHGEAR ROOMS, OR TELEPHONE ROOMS.

K. PROVIDE BASE CLEANOUT AT LOWEST FLOOR LEVEL OF ALL SANITARY STACKS, WASTE STACKS, AND ROOF DRAIN LEADERS. EXACT LOCATION OF WALL CLEANOUT MUST BE COORDINATED AND ACCEPTED BY ARCHITECT PRIOR TO INSTALLATION.

L. PROVIDE REDUCED PRESSURE BACKFLOW PREVENTER AT ALL BUILDING SERVICES, AS REQUIRED BE CODE. CONTRACTOR IS TO VERIFY THE TYPE OF BACKFLOW PREVENTION DEVICE REQUIRED FOR ALL APPLICATIONS PRIOR TO INSTALLATION.

M. PROVIDE BYPASS VALVE AT ALL EQUIPMENT INCLUDING WATER HEATERS FOR MAINTENANCE OF EQUIPMENT.

N. ALL MATERIALS IN AREAS EXPOSED TO WEATHER ARE TO BE PAINTED WITH TWO COATS OF ZINC CHROMATE PRIMER OR HOT DIP GALVANIZED.

O. ALL TRAPS TO FLOOR DRAINS AND FLOOR SINKS TO HAVE APPROVED TRAP PRIMERS.

P. PRODUCTS, MANUFACTURERS AND MODEL NO.S FOR EQUIPMENT INDICATE A BASIS FOR DESIGN BUT ARE NOT LIMITED TO THE PRODUCTS SPECIFED. SUBSTITUTION OF PRODUCTS MUST COMPLY OR EXCEED THE REQUIREMENTS DESIGNATED IN THE SPECIFICATIONS AND DRAWINGS.

GENERAL FIRE STOPPING NOTE

A. ALL PIPE PENETRATIONS OF FIRE RATED WALLS AND FLOORS SHALL BE PROTECTED WITH APPROVED FIRE STOPPING ASSEMBLIES AS MANUFACTURED BY 3 M INDUSTRIES, OR APPROVED EQUAL. THE ASSEMBLIES SHALL COMPLY WITH LATEST APPLICABLE REQUIREMENTS OF UBC CODE, NFPA 13 AND OWNER INSURANCE. PROPOSED APPLICABLE ASSEMBLIES SHALL BE UL LISTED AND SHALL BE PART OF THE PLUMBING EQUIPMENT SUBMITTAL.

TAGS & DETAIL REFERENCES

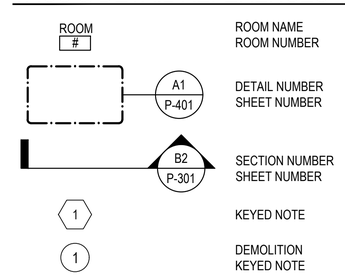

FINAL

WHPacific
6501 Americas Pkwy NE, Suite 400
Albuquerque, NM 87110
505.247.0294 Fax 505.242.4845
www.whpacific.com

PAMELA M SALAZAR-LENTZ
NEW MEXICO
14255
PROFESSIONAL ENGINEER
10.8.18

REVISIONS & ADDENDUMS		
#	DATE	REMARKS

DRAWING INFO.	
DESIGNED	PL
DRAWN	CGA
CHECKED	PL
APPROVED	
LAST EDIT	
PLOT DATE	
SUBMITTAL	6/29/18

DRAWING SCALE AS NOTED

PLUMBING LEGENDS & GENERAL NOTES

CITY OF LAS VEGAS, NEW MEXICO
UTILITIES OFFICE BUILDING RENOVATION - PHASE I

PROJECT NUMBER P0020657W.1
DRAWING FILE NAME P0020657W.1-P-001.DWG

SHEET NUMBER
P-001

GENERAL NOTES

A. SEE SHEET P-001 FOR PLUMBING LEGENDS AND GENERAL NOTES.
B. SEE SHEET P-501 FOR PLUMBING DETAILS.
C. SEE SHEET P-601 FOR PLUMBING SCHEDULES.

KEYED NOTES

1. EXISTING PLUMBING SYSTEMS TO WEST OF THE INDICATING LINE ARE TO REMAIN AND BE PROTECTED DURING CONSTRUCTION, UNO. COORDINATE WITH ALL DISCIPLINES.
2. CONNECT NEW DOMESTIC WATER LINES TO EXISTING DOMESTIC WATER LINES SERVING AREAS N.I.C.
3. CONNECT NEW CW LINE TO EXISTING HOSE BIBB.
4. ROUTE 1" CW TO WC1 AND 1/2" CW/HW TO L1.
5. INSTALL WATER HAMMER ARRESTOR, SIZED FOR FIXTURE UNIT LOAD, IN PIPING TO WATER CLOSET(S) PER DETAIL D2/P-501.
6. VENT THROUGH ROOF, PER DETAIL C4/P-501.
7. COORDINATE GAS SERVICE, METER AND REGULATOR WITH UTILITY PROVIDER FOR NEW CFH LOAD, INCLUDING LOADS IN AREAS N.I.C. FIELD VERIFY EXISTING GAS EQUIPMENT AND LOADS TO REMAIN.
8. POINT OF CONNECTION OF NEW WATER LINE TO EXISTING WATER LINE IN MECH ROOM. INSTALL ISOLATION VALVE IN RISER.
9. SEE DETAIL A1/P-501 FOR PIPING AT WATER HEATER AND ASSOCIATED EQUIPMENT.
10. LOCATE HW RECIRC BALANCING VALVE, BV1, IN PLUMBING WALL AND PIPE PER DETAIL D1/P-501.
11. INSTALL HW RECIRC BALANCING VALVE, BV1, IN RECIRC LINE ABOVE CEILING AND PIPE SIMILAR TO DETAIL D1/P-501. PROVIDE 24"x24" ACCESS PANEL IN CEILING.
12. CONNECT NEW CW/HW PIPING TO NEW WALL STOPS AT EXISTING COUNTER SINK. EXTEND EXISTING VENT FROM WASTE PIPE AND CONNECT TO NEW VENT SYSTEM.
13. CONNECT NEW GAS PIPING TO (E) GAS PIPING ON ROOF.
14. CONNECT GAS PIPING TO WATER HEATER PER DETAIL A1/P-501.
15. VALVE AND CAP (E) GAS LINE ON ROOF.
16. SEE PLAN A1 THIS SHEET FOR CONTINUATION.
17. CONNECT WASTE PIPING FROM NEW FIXTURE TO EXISTING WASTE PIPING IN PLUMBING WALL, AT FLOOR LEVEL OR BELOW FLOOR.
18. CONNECT WATER CLOSET VENT TO NEW VENT RISER IN PLUMBING WALL.
19. PLUG TRAP PRIMER CONNECTION WATERTIGHT AT FLOOR DRAIN AND INSTALL A TRAP SEAL DEVICE, TSD.

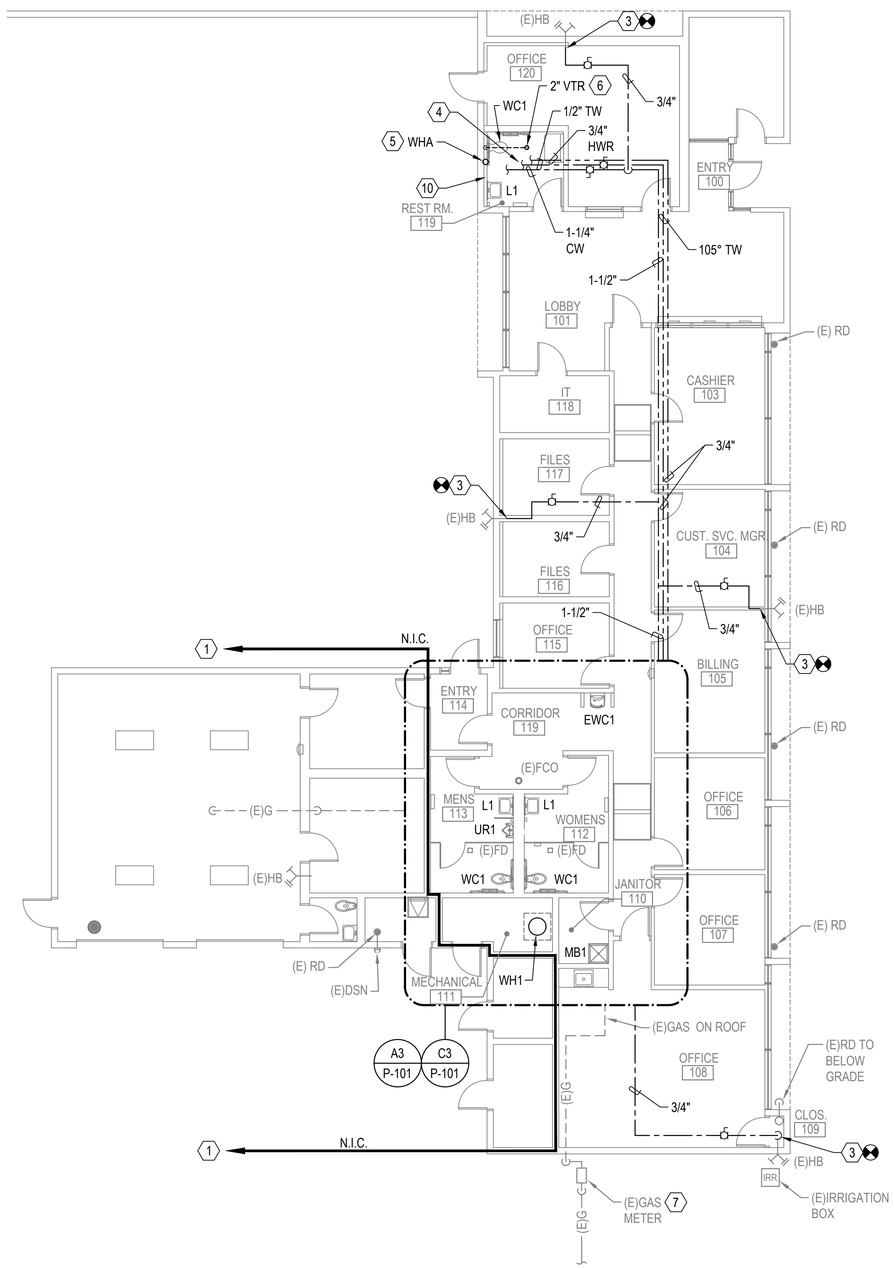

A1 PLUMBING PLAN
SCALE: 1/8" = 1'-0"

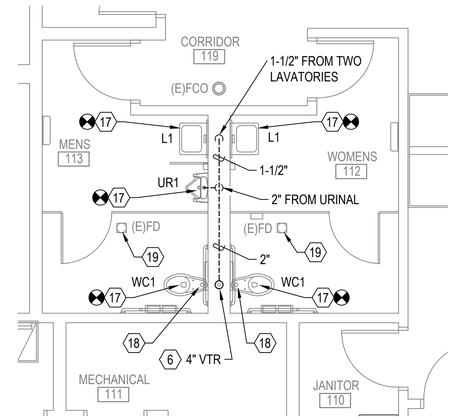

C3 ENLARGED WASTE & VENT PIPING PLAN
SCALE: 1/4" = 1'-0"

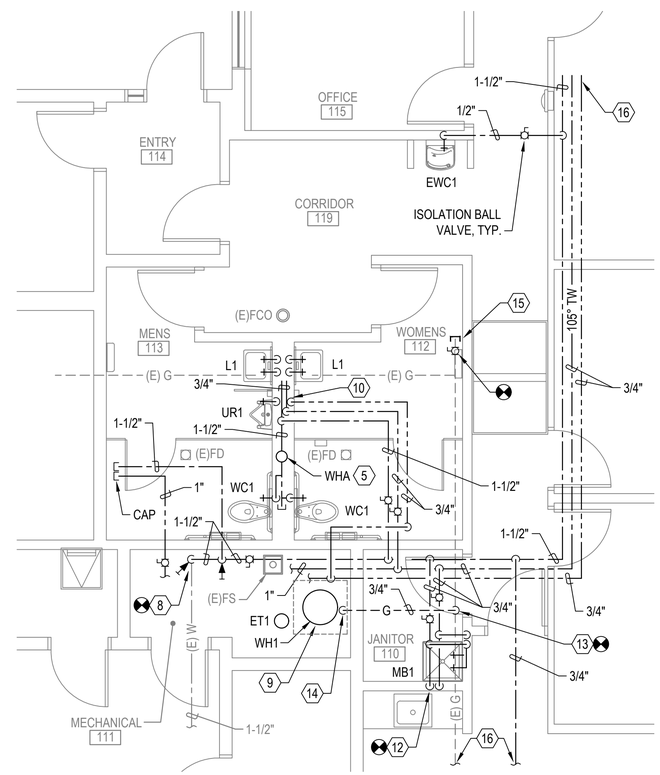

A3 ENLARGED WATER & GAS PIPING PLAN
SCALE: 1/4" = 1'-0"

SCALE:1/4"=1'

SCALE:1/8"=1'

FINAL

WHPacific
6501 Americas Pkwy NE, Suite 400
Albuquerque, NM 87110
505.247.0294 Fax 505.242.4845
www.whpacific.com

PAMELA M SALAZAR LEWIN NEW MEXICO 14255 PROFESSIONAL ENGINEER
10.8.18

REVISIONS & ADDENDUMS		
#	DATE	REMARKS

DRAWING INFO.	
DESIGNED	PL
DRAWN	CGA
CHECKED	PL
APPROVED	
LAST EDIT	
PLOT DATE	
SUBMITTAL	6/29/18

PLUMBING PLAN & ENLARGED PLUMBING PLANS

CITY OF LAS VEGAS, NEW MEXICO
UTILITIES OFFICE BUILDING RENOVATION - PHASE I

DRAWING SCALE AS NOTED

PROJECT NUMBER P002065/W.1
DRAWING FILE NAME P002065/W.1-P-101.DWG

SHEET NUMBER
P-101

GENERAL NOTES

A. SEE SHEET P-001 FOR PLUMBING LEGENDS AND GENERAL NOTES.
B. SEE SHEET P-501 FOR PLUMBING DETAILS.
C. SEE SHEET P-601 FOR PLUMBING SCHEDULES.

KEYED NOTES

1. EXISTING PLUMBING SYSTEMS TO WEST OF THE INDICATING LINE ARE TO REMAIN AND BE PROTECTED DURING CONSTRUCTION, UNO. COORDINATE WITH ALL DISCIPLINES.
2. 1-1/4" PUMPED CONDENSATE UP FROM UNIT. ROUTE AND CONNECT TO GRAVITY MAIN.
3. CLEAN OUT PLUG AT ALL CHANGES OF DIRECTION.
4. ROUTE GRAVITY CONDENSATE MAIN AT 1/8" PER FOOT MINIMUM SLOPE.
5. ROUTE 1-1/4" CONDENSATE MAIN DOWN IN WALL TO MOP SINK WITH 2" AIR GAP ABOVE FLOOD RIM OF SINK.

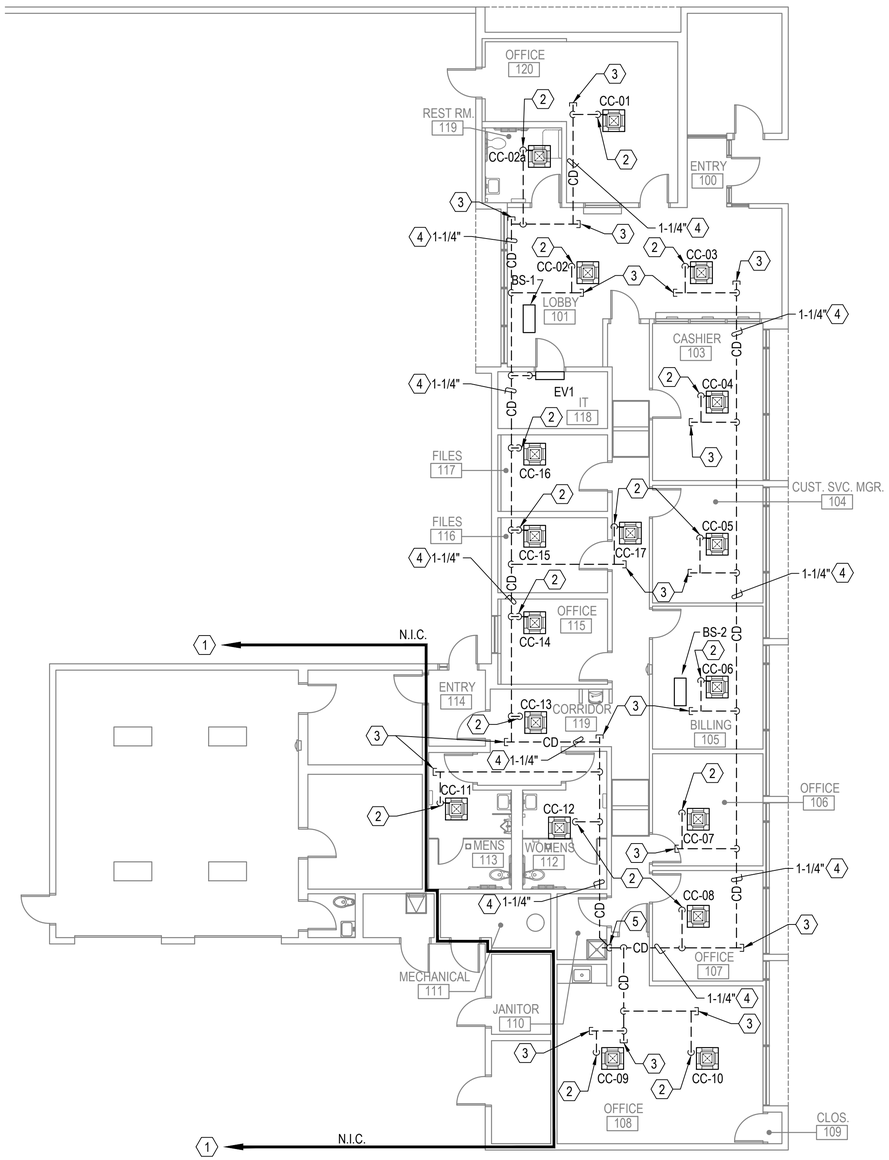

A2 PLUMBING PLAN - CONDENSATE PIPING
SCALE: 1/8" = 1'-0"

N

0 4' 8' 16'
SCALE:1/8"=1'

FINAL

WHPacific
6501 Americas Pkwy NE, Suite 400
Albuquerque, NM 87110
505.247.0294 Fax 505.242.4845
www.whpacific.com

PAMELA M SALAZAR LENTZ
NEW MEXICO
14255
PROFESSIONAL ENGINEER
10.8.18

REVISIONS & ADDENDUMS		
#	DATE	REMARKS

DRAWING INFO.	
DESIGNED	PL
DRAWN	CGA/CMB
CHECKED	PL
APPROVED	
LAST EDIT	
PLOT DATE	
SUBMITTAL	6/29/18

PLUMBING PLAN - CONDENSATE PIPING

CITY OF LAS VEGAS, NEW MEXICO
UTILITIES OFFICE BUILDING RENOVATION - PHASE I

DRAWING SCALE
AS NOTED

PROJECT NUMBER P0020657W.1
DRAWING FILE NAME P0020657W.1-P-102.DWG

SHEET NUMBER
P-102

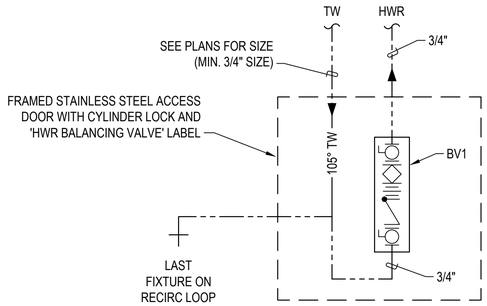

D1 HOT WATER RECIRC BALANCING VALVE DETAIL
NO SCALE

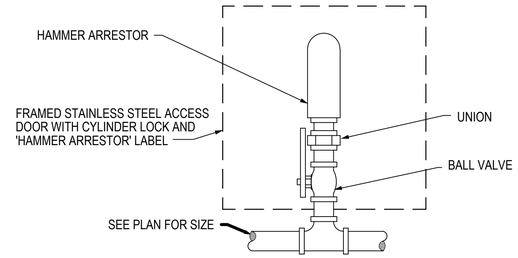

D2 WATER HAMMER ARRESTOR DETAIL
NO SCALE

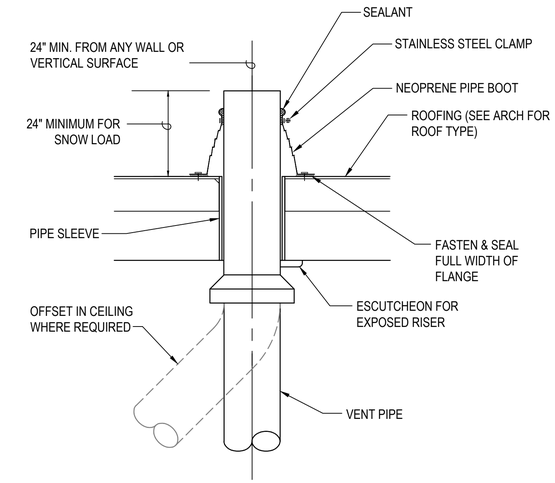

C4 VENT PENETRATION THROUGH ROOF
NO SCALE

WATER HEATER NOTES:
1. EXPANSION TANK AND RECIRCULATION PUMP TO BE MOUNTED AT 5 FT A.F.F. (MAX).
2. RECIRCULATION PUMP TO BE CONTROLLED BY AQUASTAT.
3. PRESSURE GAUGES AND THERMOMETERS TO HAVE ISOLATION BALL VALVES FOR EASE OF REPLACEMENT.
4. PROVIDE VALVES IN MECHANICAL ROOM FOR DRAINDOWN OF DOMESTIC WATER PIPING.
5. PIPING ARRANGEMENT SHOWN AT THERMOSTATIC MIXING VALVE IS BASED ON THE SPECIFIED TMV1. INSTALL PIPING AT THERMOSTATIC MIXING VALVE PER MANUFACTURER'S PIPING METHOD AND RECOMMENDATIONS FOR A TEMPERED WATER RECIRCULATION SYSTEM.

SEISMIC STRAP NOTES:
1. STRAPS MUST BE IN AT LEAST TWO PLACES: UPPER AND LOWER 1/3 OF THE TANK AND THE LOWER STRAP MUST BE 4" ABOVE THE CONTROLS.
2. IF STUDS ARE NOT PROPERLY LOCATED TO ALLOW FOR ADEQUATE ANCHORAGE, ATTACH MIN. 2x4 CROSS BRACE STUDS WITH 1/4"x4" LAG SCREW AND WASHERS, THEN ATTACH ANCHOR STRAP TO CROSS BRACE WITH LAG SCREW AND WASHERS.

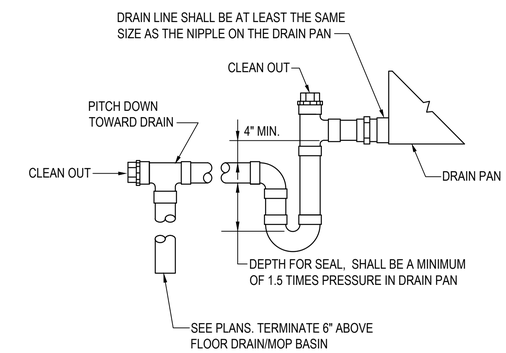

NOTE:
A CONDENSATE TRAP IS ONLY REQUIRED AT A GRAVITY CONDENSATE DRAIN FROM A UNIT. A CONDENSATE TRAP IS NOT REQUIRED AT UNITS WITH CONDENSATE PUMPS.

B4 CONDENSATE DRAIN DETAIL
NO SCALE

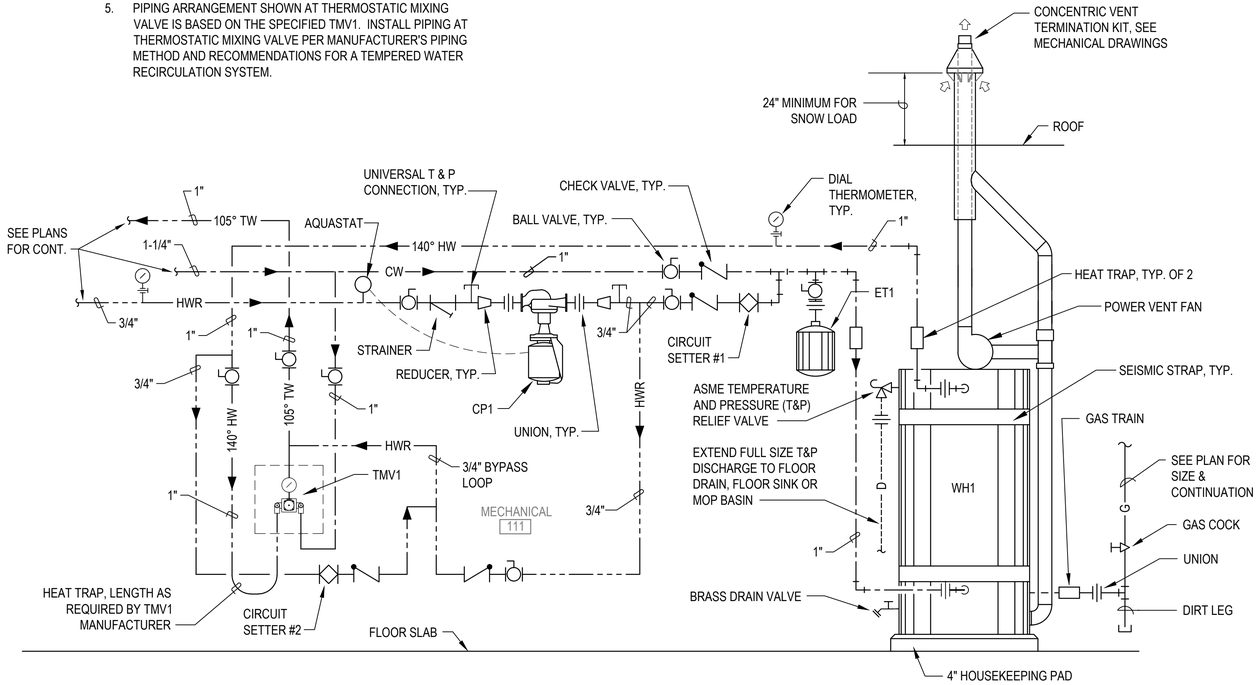

A1 WATER HEATER WH1 DETAIL
SCALE: NONE

FINAL

WHPacific
6501 Americas Pkwy NE, Suite 400
Albuquerque, NM 87110
505.247.0294 Fax 505.242.4845
www.whpacific.com

PAMELA M SALAZAR LENTZ
NEW MEXICO
14255
PROFESSIONAL ENGINEER
10.8.18

REVISIONS & ADDENDUMS		
#	DATE	REMARKS

DRAWING INFO.	
DESIGNED	PL
DRAWN	CGA
CHECKED	PL
APPROVED	
LAST EDIT	
PLOT DATE	
SUBMITTAL	6/29/18

DRAWING SCALE AS NOTED

PLUMBING DETAILS

CITY OF LAS VEGAS, NEW MEXICO
UTILITIES OFFICE BUILDING RENOVATION - PHASE I

PROJECT NUMBER P002065/W.1
DRAWING FILE NAME P002065/W.1-P-501.DWG

SHEET NUMBER
P-501

DOMESTIC WATER HEATER - GAS FIRED

SYMBOL	MANUF.	LOCATION	MODEL	GALLONS STORAGE	RECOVERY GPH @100F RISE	INPUT MBH @ SL	EFFICIENCY %	ELECTRICAL VOLT/PH/HZ	REMARKS
WH1	BRADFORD WHITE	MECHANICAL 112	LG2PDV50H603N	48	58	60	78	120/1/60	1,2,3,4

REMARKS:
1. GAS TRAIN: IRI (INDUSTRIAL RISK INSURERS) COMPLIANT.
2. GLASS LINED STEEL TANK, ELECTRONIC GAS CONTROLS, HEAT TRAP, ANODE.
3. PROVIDE WITH T&P RELIEF VALVE.
4. LIGHT DUTY COMMERCIAL POWER DIRECT VENT WATER HEATER.

THERMOSTATIC MIXING VALVE SCHEDULE

SYMBOL	MANUF.	LOCATION	MODEL No.	MINIMUM FLOW GPM	ALLOWABLE PRESSURE DROP, PSI	CAPACITY GPM AT 10 PSI PD	HOT INLET WATER TEMP.°F	COLD INLET WATER TEMP. °F	DELIVERED WATER TEMP. °F	REMARKS
TMV1	LEONARD	MECHANICAL 112	C210-LF-AF-TR-37C	0.5	10	4.0	140	40	105	1-6

REMARKS:
1. LEAD FREE THERMOSTATIC MIXING VALVE, SOLID BIMETAL THERMOSTAT, ADJUSTABLE HIGH TEMPERATURE LIMIT STOP, INLET CHECK STOPS, AND WITH DIAL THERMOMETER ON OUTLET.
2. INSTALL USING MANUFACTURER'S PIPING METHOD AND RECOMMENDATIONS FOR A TEMPERED WATER RECIRCULATION SYSTEM.
3. COMPLETE UNIT MOUNTED IN AN EXPOSED BAKED WHITE ENAMEL CABINET WITH CYLINDER LOCK.
4. VALVE ASSEMBLY: ROUGH BRONZE FINISH.
5. FACTORY ASSEMBLED AND TESTED.
6. UP TO 8 GPM RECIRCULATION FLOW.

FIXTURE CONNECTION SCHEDULE

DESCRIPTION	MINIMUM INDIVIDUAL CONNECTIONS (IN)			
	WASTE	VENT	CW	HW
WATER CLOSET, WC1	4	SEE PLAN	1	-
URINAL, UR1	2	2	3/4	-
LAVATORY, L1	1-1/2	1-1/2	1/2	1/2
MOP BASIN, MB1	3	2	1/2	1/2
ELEC. WATER COOLER, EWC1	1-1/2	1-1/2	1/2	-

WATER DEVICES SCHEDULE

SYMBOL	DESCRIPTION
WHA	WATER HAMMER ARRESTOR: STAINLESS STEEL CONSTRUCTION, PRE-CHARGED, PERMANENTLY SEALED. 3/4" (1-11 FU'S) OR 1" (12-330 FU'S) PIPE SIZE. JAY R. SMITH Figure No. / PDI Unit Size / Figure No. / PDI Unit Size 5005 1-11 FU'S A / 5030 61-113 FU'S D 5010 12-32 FU'S B / 5040 114-154 FU'S E 5020 33-60 FU'S C / 5050 155-330, FU'S F
ET1	EXPANSION TANK (DOMESTIC WATER): AMTROL MODEL ST-5C, 0.9 ACCEPTANCE GAL., 2.0 TOTAL GAL., IN-LINE MODEL, PRE-CHARGED, DIAPHRAGM TYPE, DESIGNED FOR POTABLE HOT WATER WITH 3/4" SYSTEM CONNECTION.
CP1	DOMESTIC HOT WATER CIRCULATING PUMP: TACO MODEL 0010-SF3 LEAD-FREE STAINLESS STEEL PUMP, 4 GPM @ 9.8 FT HEAD LOSS, 1/8 HP, 115V/1PH, 1.20 AMPS, 3250 RPM, AND 3/4" INLET/OUTLET FLANGES. PROVIDE DISCONNECT ON/OFF SWITCH AT PUMP. PUMP TO BE CONTROLLED BY AQUASTAT.
BV1	BALANCING VALVE: CIRCUITSOLVER MODEL CSUA-3/4 THERMOSTATIC SELF-ACTUATING BALANCING VALVE, LEAD-FREE, ALL STAINLESS STEEL CORROSION RESISTANT CONSTRUCTION COMPLETE WITH UNION, CHECK VALVE AND ISOLATION VALVES ON BOTH SIDES. SIZE: 3/4"

WASTE DEVICES SCHEDULE

SYMBOL	DESCRIPTION
FCO	FLOOR CLEANOUT: FOR CONCRETE: SMITH NO. 4023-UG. FOR CERAMIC TILE OR QUARRY TILE: SMITH NO. 4023-UPB. FOR VINYL OR ASBESTOS VINYL TILE: SMITH NO. 4023-UPB. FOR CARPET: SMITH NO. 4023UX. FOR OTHER FLOOR FINISHES: AS APPROVED BY ARCHITECT. NOTE: WHERE INDICATED POLISHED BRONZE (PB), IT SHALL BE POLISHED NICKEL BRONZE. SIZE AS INDICATED ON DRAWINGS OR AS REQUIRED BY CODE.
TSD	TRAP SEAL DEVICE: SURE SEAL MODEL SS(2-3-4)009V FLOOR DRAIN TRAP SEAL WITH COMMERCIAL GRADE UV AND OZONE RESISTANT ABS PLASTIC HOUSING WITH PROPRIETARY EPDM RUBBER DIAPHRAGM AND SOFT RUBBER SEALING GASKET. FLOOR RATING ASSE - 1072 AF-GW. INSTALL AT FLOOR DRAINS AND FLOOR SINKS TO MAINTAIN TRAP SEAL. OUTLET SIZE: 2", 3" OR 4" TO MATCH DRAIN PIPE SIZE.
WCO	WALL CLEANOUT: JR SMITH NO. 4472, CAST BRONZE TAPER THREAD PLUG WITH STAINLESS STEEL COVER AND VANDAL PROOF SCREW. SIZE AS INDICATED ON DRAWINGS, AS REQUIRED BY CODE OR WHERE SHOWN ON DRAWINGS. NOTE: INSTALL WHERE WCO IS REQUIRED BY CODE OR WHERE SHOWN ON DRAWINGS.

PLUMBING FIXTURE SCHEDULE

SYMBOL	DESCRIPTION
WC1	WATER CLOSET (ACCESSIBLE): AMERICAN STANDARD "MADERA", FLOOR MOUNTED, 16-1/2" RIM HEIGHT, ELONGATED BOWL, SIPHON JET, 10" OR 12" ROUGH IN, 2 BOLT CAPS, VITREOUS CHINA, 1-1/2" TOP SPUD, LOW CONSUMPTION TYPE AT 1.6 GALLONS PER FLUSH AND SLOAN ROYAL NO. 111 FLUSH VALVE WITH WALL AND SPUD ESCUTCHEONS, NON HOLD OPEN HANDLE, SCREW DRIVER ANGLE STOP AND VACUUM BREAKER. OLSONITE NO. 10CC SOLID PLASTIC SEAT, OPEN FRONT, FIRE RETARDANT, ELONGATED, WITHOUT COVER AND WITH STAINLESS STEEL CHECK HINGE. SERVICES: 2", 3" OR 4" VENT (AS SHOWN ON DRAWINGS), 4" WASTE AND 1" CW
UR1	URINAL (ACCESSIBLE): AMERICAN STANDARD "WASHBROOK", WALL HUNG, WASHOUT FLUSHING ACTION, 3/4" TOP SPUD, 2" REAR OUTLET, 18-7/8" WIDE, VITREOUS CHINA, 14-1/8" PROJECTION FROM WALL, LOW CONSUMPTION TYPE AT 0.5 GALLONS PER FLUSH AND SLOAN ROYAL NO. 186-0.5 ESS-OR SENSOR-ACTIVATED FLUSH VALVE WITH WALL AND SPUD ESCUTCHEONS, NON HOLD OPEN INTEGRAL SOLENOID OPERATOR, SCREW DRIVER ANGLE STOP, VACUUM BREAKER AND OVERRIDE BUTTON. PROVIDE WITH STAINLESS STEEL STRAINER/GRATE. FLOOR SUPPORTED CARRIER, CONCEALED IN WALL, BY ZURN, WADE, JOSAM OR SMITH. SERVICES: 1-1/2" VENT, 2" WASTE AND 3/4" CW
L1	LAVATORY (ACCESSIBLE): AMERICAN STANDARD "LUCERNE", WHITE VITREOUS CHINA, WALL MOUNTED, FRONT OVERFLOW, SELF-DRAINING DECK AREA WITH CONTOURED BACK AND SIDE SPLASH SHIELDS AND FAUCET LEDGE. LAVATORY SIZE 20-1/2" X 18-1/4". FAUCET HOLES TO MATCH FAUCET. FAUCET: ZURN No. Z81104-XL CHROME-PLATED CAST BRASS BODY WITH 4" LONG INTEGRAL SPOUT, 4" VANDAL-RESISTANT COLOR-CODED METAL WRIST BLADE HANDLES. PROVIDE WITH 0.5 GPM VANDAL-RESISTANT PRESSURE COMPENSATING MALE AERATOR, CHROME PLATED BRASS GRID DRAIN AND CHROME PLATED CODE-APPROVED ADJUSTABLE "P" TRAP WITH WASTE-TO-WALL. CARRIER: FLOOR-SUPPORTED IN WALL WITH CONCEALED ARMS, BY ZURN, WADE, JOSAM OR SMITH. MOUNTING HEIGHT PER ARCHITECT TO MEET ADA REQUIREMENTS. SERVICES: 1-1/2" WASTE, 1-1/2" VENT, 1/2"CW, 1/2" HW
MB1	MOP BASIN: FIAT MODEL TSB-100 SIZE 24"x24"x12" DEPTH, WITH 2" WIDE SHOULDERS, CONSTRUCTED OF ONE PIECE, PRECAST TERRAZZO AND WITH STAINLESS STEEL CAP ON ALL CURBS. DRAIN BODY IS STAINLESS STEEL CAST INTEGRALLY WITH STAINLESS STEEL STRAINER. FAUCET: ZURN No. Z842M1 POLISHED CHROME CAST BRASS WITH ADJUSTABLE CENTERS, 6" CAST BRASS VACUUM BREAKER SPOUT WITH 3/4" HOSE THREADED OUTLET, PAIL HOOK, WALL BRACE AND BRASS LEVER HANDLES. PROVIDE WITH #832AA HOSE AND HOSE BRACKET, #889-CC MOP HANGER, 833AA SILICONE SEALANT AND #MSG2424 STAINLESS STEEL WALL GUARDS. INSTALL MOP BASIN ON A 1/2" LAYER OF MORTAR PER MANUFACTURER'S REQUIREMENTS. SERVICES: 3" WASTE, 2" VENT, 1/2" CW, 1/2" HW
EWC1	ELECTRICAL WATER COOLER (ACCESSIBLE): BOTTLE FILLING STATION AND WALL MOUNTED BARRIER FREE ELECTRIC WATER COOLER, HIGH EFFICIENCY, FILTERED, LEAD-FREE DESIGN, ELKAY MODEL No. LZSG8WSSK AND BOTTLE FILLER MODEL No. LZWSR, WITH HANDS-FREE VISUAL FILTER MONITOR, ELECTRONIC BOTTLE FILLER SENSOR AND WITH ELECTRONIC FRONT AND SIDE BUBBLER PUSHBAR ACTIVATION. CAPACITY OF 8.0 GPH OF 50 DEGREE F WATER AT 90 DEGREE F ROOM TEMPERATURE AND 80 DEGREE F INLET WATER TEMPERATURE. ELECTRICAL: 7.0 AMPS, 360 WATTS AT 115V/1PH. PROVIDE P-TRAP AND WALL STOP AND FLOOR SUPPORTED CARRIER, CONCEALED IN WALL, BY ZURN, WADE, JOSAM OR SMITH. REFRIGERANT HFC-134A. PROVIDE WITH FILTER BY MANUFACTURER. SERVICES: 1-1/2" WASTE, 1-1/2" VENT, 1/2"CW.

FINAL

WHPacific
6501 Americas Pkwy NE, Suite 400
Albuquerque, NM 87110
505.247.0234 Fax 505.242.4845
www.whpacific.com

PAMELA M SALAZAR LEWIN
NEW MEXICO
14255
PROFESSIONAL ENGINEER
10.8.18

REVISIONS & ADDENDUMS

#	DATE	REMARKS

DRAWING INFO.	
DESIGNED	PL
DRAWN	CGA
CHECKED	PL
APPROVED	
LAST EDIT	
PLOT DATE	
SUBMITTAL	6/29/18

PLUMBING SCHEDULES

CITY OF LAS VEGAS, NEW MEXICO
UTILITIES OFFICE BUILDING RENOVATION - PHASE I

DRAWING SCALE: AS NOTED

PROJECT NUMBER: P002065?W.1
DRAWING FILE NAME: P002065?W.1-P-601.DWG

SHEET NUMBER
P-601

LIGHTING LEGEND

	LIGHTING FIXTURE - SURFACE (CEILING)
	LIGHTING FIXTURE - RECESSED
	WALL MOUNTED FIXTURE
	2x2 RECESSED FIXTURE
	2x4 RECESSED FIXTURE
	1x4 RECESSED FIXTURE
	2x2 SURFACE MOUNTED FIXTURE
	2x4 SURFACE MOUNTED FIXTURE
	1X4 SURFACE MOUNTED FIXTURE
	PENDANT MOUNTED FIXTURE
	WALL MOUNTED FIXTURE
	STRIP FIXTURE
	TRACK LIGHTING SYSTEM
	POLE MOUNTED AREA LIGHT
	EXIT SIGN - CEILING MOUNTED (SOLID INDICATES EXIT SIGN FACING)
	EXIT SIGN - WALL MOUNTED (SOLID INDICATES EXIT SIGN FACING)
	EMERGENCY LIGHT
	EMERGENCY LIGHT REMOTE HEAD
	LIGHT FIXTURE W/ EMERGENCY BATTERY
	PHOTOCELL, AS NOTED
$	SINGLE POLE SWITCH +48" U.O.N.
$K	KEY OPERATED SWITCH +48" U.O.N.
$D	DIMMER SWITCH, AS NOTED, +48" U.O.N.
$3 $4	3-WAY & 4-WAY SWITCH +48" U.O.N.
$PL	SINGLE POLE SWITCH W/ PILOT LIGHT (PL "ON" WHEN LIGHT IS "OFF" - U.O.N.) + 48" U.O.N.
$OSD	OCCUPANCY SENSOR - WALL MOUNTED, DIMMER SWITCH
OS	OCCUPANCY SENSOR - CEILING MOUNTED
OS	OCCUPANCY SENSOR - WALL MOUNTED

POWER LEGEND

	ELECTRIC METER
	PANELBOARD
	MOTOR CONNECTION
G	GENERATOR
$T	FRACTIONAL HP MOTOR DISCONNECT SWITCH W/INTEGRAL THERMAL PROTECTION
	DISCONNECT SWITCH
	FUSED DISCONNECT SWITCH
	COMBINATION MOTOR STARTER DISCONNECT
	EQUIPMENT CONNECTION
T	TRANSFORMER

WIRING DEVICES LEGEND

	RECEPTACLE - SINGLE +18" U.O.N.
	RECEPTACLE - DUPLEX +18" U.O.N.
	RECEPTACLE - QUAD +18" U.O.N.
	RECEPTACLE - SPLIT WIRED +18" U.O.N.
GFCI	RECEPTACLE - GFCI OR ON GFI CIRCUIT
GFCI	RECEPTACLE - QUAD - GFCI ON GFI CIRCUIT +18" U.O.N.
	RECEPTACLE - 220V +18" U.O.N.
	RECEPTACLE - HIGH VOLTAGE
	RECEPTACLE - SPECIAL +18" U.O.N.
	RECEPTACLE - FLOOR MOUNTED
	RECEPTACLE - CEILING MOUNTED
J	JUNCTION BOX
	PUSH BUTTON
W	PLUG MOLD
	POWER POLE

WIRING CIRCUITS LEGEND

	CONDUIT - CONCEALED
	CONDUIT - EXPOSED
	CONDUIT - UNDERGROUND
	CONDUIT - FLEX
A-2	HOMERUN (PANEL AND CIRCUIT #)
	CONDUIT STUB-UP
	CONDUIT STUB-DN

FIRE ALARM SYSTEM LEGEND

F	FA MANUAL PULL STATION
	FA HORN STROBE
	FA STROBE
M	MAGNETIC DOOR HOLD OPEN
135°F	FA HEAT DETECTOR (FIXED TEMP. NOTED)
	SMOKE DETECTOR - IONIZATION TYPE
P/CO/A	SMOKE /CO DETECTOR - PHOTO ELECTRIC TYPE W/AUDIO
P	SMOKE DETECTOR - PHOTO ELECTRIC TYPE
D	SMOKE DETECTOR - DUCT MOUNTED
S	FA SPEAKER
FACP	FIRE ALARM CONTROL PANEL
FAAP	FIRE ALARM ANNUNCIATOR PANEL

COMMUNICATIONS LEGEND

	TELECOM OUTLET, 2 JACKS UON
	TELECOM OUTLET - FLOOR MOUNTED, 2 JACKS UON
	TELECOM OUTLET - CEILING MOUNTED, 2 JACKS UON
	EXISTING TELECOM AND/OR DATA OUTLET
TV	TELEVISION OUTLET
S	SPEAKER - WALL MOUNTED
S	SPEAKER - CEILING MOUNTED
	BELL
S	SPEAKER / CLOCK
	CLOCK - WALL MOUNTED
	CLOCK - CEILING MOUNTED
TTB	TELEPHONE TERMINAL BOARD

SECURITY LEGEND

	WALL MOUNT CCTV
	RECESSED CEILING MOUNT CCTV WITH DOME
	CEILING MOUNT DOME
	RACK
G	GLASS BREAK SENSOR
D	MAGNETIC DOOR SENSOR
M	MOTION SENSOR
KP K	KEYPAD
RIM	REMOTE ALARM INPUT MODULE
CR	CARD READER
ACU	NETWORKED INTELLIGENT CONTROLLER

LINE TYPE LEGEND

	EXISTING
	NEW
	DEMOLITION

THIS IS A STANDARD (TYPICAL) SYMBOLS LIST. NOT ALL SYMBOLS ARE NECESSARILY USED ON THIS PROJECT. ALSO, ADDITIONAL SYMBOLS MAY BE INTRODUCED ON DRAWINGS AND DEFINED THEREIN.

ELECTRICAL ABBREVIATIONS

NOTE: NOT ALL ABBREVIATIONS USED ON THIS PROJECT

AC	ABOVE COUNTER	(E)	EXISTING	IBO	INSTALLED BY OTHERS	PA	PUBLIC ADDRESS
AFCI	ARC FAULT CIRCUIT INTERRUPTER	EM	EMERGENCY	INC	INCANDESCENT	PC	PHOTOCELL
AFF	ABOVE FINISHED FLOOR	EMCS	ENERGY MANAGEMENT CONTROL SYSTEM	ITB	INTERCOM TERMINAL BOX	PH	PHASE
AFG	ABOVE FINISHED GRADE	EO	ELECTRICALLY OPERATED			PL	PILOT LIGHT
AMP	AMPERES	EP	EXPLOSION PROOF	KSU	KEY SWITCH UNIT	PNL	PANEL
ATS	AUTOMATIC TRANSFER SWITCH	EKSU	ELECTRONIC KEY SWITCH UNIT			PTZ	PAN, TILT, ZOOM
		ETR	EXISTING TO REMAIN	LC	LIGHTING CONTACTOR		
BB	BASEBOARD (HEATER)	EWC	ELECTRIC WATER COOLER	LPS	LOW PRESSURE SODIUM	QTZ	QUARTZ
BCU	BARE COPPER						
BFC	BELOW FINISH CEILING (BOTTOM OF DEVICE)	FAAP	FIRE ALARM ANNUNCIATOR PANEL	MAX	MAXIMUM	ROW	RIGHT OF WAY
BLDG	BUILDING	FACP	FIRE ALARM CONTROL PANEL	MCB	MAIN CIRCUIT BREAKER		
		FA	FIRE ALARM	MCC	MOTOR CONTROL CENTER	SEC	SECTION
CB	CIRCUIT BREAKER	FBO	FURNISHED BY OTHERS	MDP	MAIN DISTRIBUTION PANEL	SSP	SECURITY SYSTEM PANEL
CFF	CLEARANCE FINISH FLOOR (SURFACE TO SURFACE)	FWP	FACTORY WIRED PANEL	MDS	MAIN DISTRIBUTION SWITCHBOARD		
CFC	CLEARANCE FINISH CEILING (SURFACE TO SURFACE)			MH	MOUNTING HEIGHT	TC	TIME CLOCK
CLG	CEILING	GFI	GROUND FAULT INTERRUPTER	MLO	MAIN LUGS ONLY	TTB	TELEPHONE TERMINAL BOARD
CKT	CIRCUIT	GND	GROUND	MTD	MOUNTED	TTC	TELEPHONE TERMINAL CABINET
CO	CONDUIT ONLY			MTS	MANUAL TRANSFER SWITCH		
C	CONDUIT	HID	HIGH INTENSITY DISCHARGE			UON	UNLESS OTHERWISE NOTED
CP	CONTROL PANEL	HIT	HIGH INTENSITY TUNGSTEN	NIC	NOT IN CONTRACT		
		HP	HORSEPOWER	NL	NIGHT LIGHT	VEL	VERIFY EXACT LOCATION
DC	DIRECT CURRENT	HPS	HIGH PRESSURE SODIUM	NTS	NOT TO SCALE	VOS	VERIFY ON SITE
DCS	DIGITAL CONTROL SYSTEM	HWH	HOT WATER HEATER			VTR	VENT THROUGH ROOF
DIST	DISTANCE			OC	ON CENTER		
				OL	OVERLOAD	W/	WITH
						W/O	WITHOUT
						WP	WEATHER PROOF
						XFRM	TRANSFORMER

GENERAL ELECTRICAL NOTES

(APPLICABLE TO ALL ELECTRICAL DRAWINGS)

A. CONTRACTOR IS STRONGLY ENCOURAGED TO VISIT AND CAREFULLY EXAMINE THOSE PORTIONS OF THE SITE AFFECTED BY THIS WORK BEFORE SUBMITTING PROPOSALS, SO AS TO BECOME FAMILIAR WITH EXISTING CONDITIONS AND DIFFICULTIES THAT WILL AFFECT EXECUTION OF THE WORK.

B. ALL ELECTRICAL WORK AND MATERIALS MUST CONFORM TO THE LATEST STANDARDS FOR THE NATIONAL ELECTRICAL CODE AND ANY OTHER APPLICABLE CODES. MATERIALS SHALL BE LISTED BY THE UNDERWRITER'S LABORATORIES, INC. SHOULD PLANS AND CODES CONFLICT, THE CODE TAKES PREFERENCE.

C. PROVIDE AS USED HERE ON THE DRAWINGS, PROVIDE IS AN ALL-INCLUSIVE TERM REQUIRING CONTRACTOR TO FURNISH, INSTALL, WIRE AND CONNECT ALL SPECIFIED EQUIPMENT AS WELL AS COMPONENTS, ACCESSORIES, WIRING, AND MOUNTING HARDWARE TO INSURE THAT SPECIFIED EQUIPMENT FUNCTIONS TO MEET SYSTEM(S) REQUIREMENTS.

D. UNLESS OTHERWISE NOTED, ALL POWER CIRCUIT CONDUCTORS SHALL BE COPPER AND MINIMUM #12 AWG IN 3/4" CONDUIT.

E. A GREEN, COPPER GROUND WIRE SHALL BE INSTALLED IN ALL CONDUIT SYSTEMS AND SHALL BE BONDED TO ALL ENCLOSURES, BOXES, AND EQUIPMENT.

F. EXISTING CONDITIONS AND UTILITIES INDICATED ARE TAKEN FROM EXISTING CONSTRUCTION DOCUMENTS, VARIOUS SURVEYS, AND FIELD INVESTIGATIONS.

G. IT SHALL BE THE RESPONSIBILITY OF THE CONTRACTOR TO PROTECT EXISTING UTILITIES FROM DAMAGE. THE CONTRACTOR SHALL BEAR ALL EXPENSE FOR REPAIR OR REPLACEMENT OF UTILITIES OR OTHER PROPERTY DAMAGED BY OPERATIONS IN CONJUNCTION WITH THE COMPLETION OF THIS WORK.

H. REMOVE EXISTING EXPOSED POWER, MATERIAL AND EQUIPMENT WHICH ARE MADE OBSOLETE OR WHICH INTERFERE WITH THE CONSTRUCTION OF THE PROJECT.

I. REINSTALL ANY SUCH POWER, MATERIALS AND EQUIPMENT WHICH ARE REQUIRED TO REMAIN ACTIVE FOR THE FACILITY TO BE FULLY FUNCTIONAL.

J. ALL ITEMS REMOVED AND NOT RE-USED SHALL BECOME CONTRACTOR'S PROPERTY AND REMOVED FROM CITY PROPERTY UNLESS DIRECTED OTHERWISE BY THE USER.

K. CONTRACTOR TO BE AWARE OF THE ADD ALTERNATES SHOWN ON G-001.

TAGS & DETAIL REFERENCES

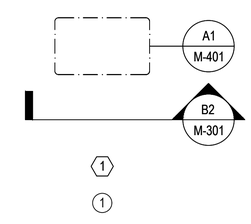

ROOM NAME
ROOM NUMBER

DETAIL NUMBER
SHEET NUMBER

SECTION NUMBER
SHEET NUMBER

KEYED NOTE

DEMOLITION
KEYED NOTE

FINAL

WHPacific
6501 Americas Pkwy NE, Suite 400
Albuquerque, NM 87110
505.247.0294 Fax 505.242.4845
www.whpacific.com

PHILLIP J. SITGES
NEW MEXICO
22284
PROFESSIONAL ENGINEER
10/8/18

REVISIONS & ADDENDUMS		
#	DATE	REMARKS

DRAWING INFO.	
DESIGNED	PJS
DRAWN	PJS
CHECKED	BF
APPROVED	
LAST EDIT	
PLOT DATE	
SUBMITTAL	6/29/18

DRAWING SCALE AS NOTED

ELECTRICAL LEGEND, ABBREVIATIONS & GENERAL NOTES

CITY OF LAS VEGAS, NEW MEXICO
UTILITIES OFFICE BUILDING RENOVATION - PHASE I

PROJECT NUMBER P0020657W.1
DRAWING FILE NAME P0020657W.1-E-001.DWG

SHEET NUMBER
E-001

GENERAL NOTES

A. VERIFY EXISTING UTILITIES PRIOR TO COMMENCING WORK.

KEYED NOTES

1. CONTRACTOR TO PROVIDE 1-4" PVC CONDUIT FROM COMMUNICATIONS DEMARCATION TO BUILDING. RUN CONDUIT UP WALL AND INTO 8"X8" NEMA 3R PULL BOX. FROM PULL BOX RUN 1-4" CONDUIT THROUGH BUILDING CEILING PLENUM SPACE TO IT ROOM. CONTRACTOR TO RUN MULTI-MODE FIBER FROM COMMUNICATIONS DEMARCATION TO IT ROOM. COORDINATE WITH COMMUNICATIONS PROVIDER. SEE SHEET E-501 FOR TRENCH DETAILS.
2. ROUTE FIBER THROUGH CEILING PLENUM IN BUILDING TO IT ROOM. LEAVE 12' OF FIBER COILED IN IT ROOM.

A1 ELECTRICAL SITE PLAN
SCALE: 1/8"=1'-0"

N

0 4' 8' 16'
SCALE:1/8"=1'

FINAL

WHPacific
6501 Americas Pkwy NE, Suite 400
Albuquerque, NM 87110
505.247.0294 Fax 505.242.4845
www.whpacific.com

PHILLIP J. SITGES
NEW MEXICO
22284
PROFESSIONAL ENGINEER
10/8/18

REVISIONS & ADDENDUMS		
#	DATE	REMARKS

DRAWING INFO.	
DESIGNED	PJS
DRAWN	PJS
CHECKED	BF
APPROVED	
LAST EDIT	
PLOT DATE	
SUBMITTAL	6/29/18

ELECTRICAL SITE PLAN

CITY OF LAS VEGAS, NEW MEXICO
UTILITIES OFFICE BUILDING RENOVATION - PHASE I

PROJECT NUMBER	DRAWING FILE NAME	DRAWING SCALE
P0020657W.1	P0020657W.1-ES101.DWG	AS NOTED

SHEET NUMBER
ES101

GENERAL NOTES

A. CIRCUIT EMERGENCY LIGHTING AHEAD OF LIGHTING CONTROLS SERVING THE SPACE.
B. ALL WIRING TO BE #12AWG UNLESS NOTED OTHERWISE.
C. CONTRACTOR TO FIELD VERIFY ALL EXISTING CONDITIONS.
D. ALL NEW LIGHTING TO BE CIRCUITED TO POWER SERVING SPACE RETAINED DURING DEMOLITION.
E. REFER TO G-001 FOR ADD ALTERNATES.

KEYED NOTES (X)

1. LIGHTING CONTROLS IN OFFICES TO BE LEVITON OSD10-I0W 0-10V PASSIVE INFRARED DIMMING WALL SWITCH SENSOR OR EQUIVALENT.
2. LEVITON DUAL RELAY 02C DUAL TECHNOLOGY OCCUPANCY SENSOR OR EQUIVALENT, UTILIZE ONE RELAY FOR LIGHTING AND OTHER RELAY TO CONTROL FAN. LIGHT AND FAN TO TURN OFF 5 MINUTES AFTER USER EXITS RESTROOM.
3. CEILING OCCUPANCY SENSOR TO BE LEVITON CEILING MOUNTED 03C15-IDW OR EQUIVALENT.

DEMOLITION KEYED NOTES (X)

1. EXISTING LIGHTING AND LIGHTING CONTROLS IN SPACE TO BE DEMOLISHED, RETAIN CIRCUIT SERVING SPACE TO POWER NEW LIGHTING. RETAIN BACKBOX AND CONDUIT FOR SWITCHING TO BE REUSED FOR NEW OCCUPANCY SENSORS.
2. EXISTING LIGHTING AND CONTROLS TO BE DEMOLISHED. REMOVE CONDUIT AND WIRE BACK TO NEXT UPSTREAM DEVICE OR TO PANEL.

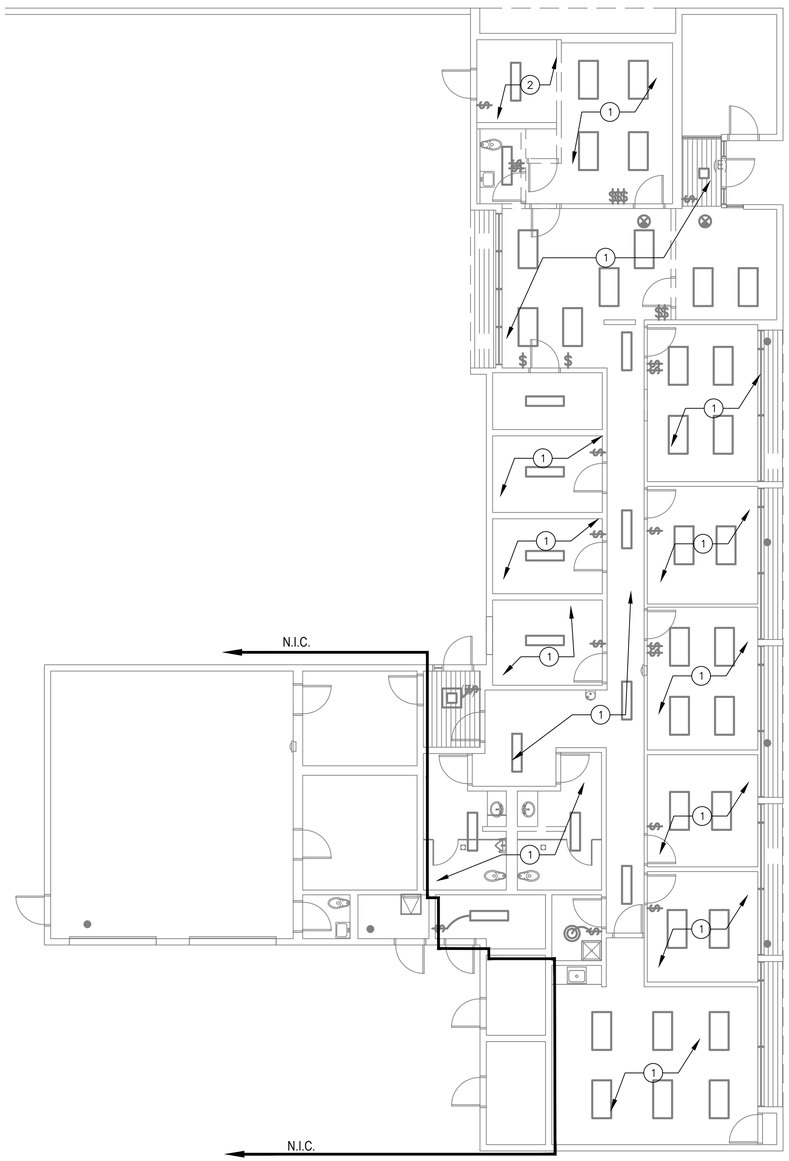

A1 ELECTRICAL LIGHTING DEMOLITION PLAN
SCALE: 1/8"=1'-0"

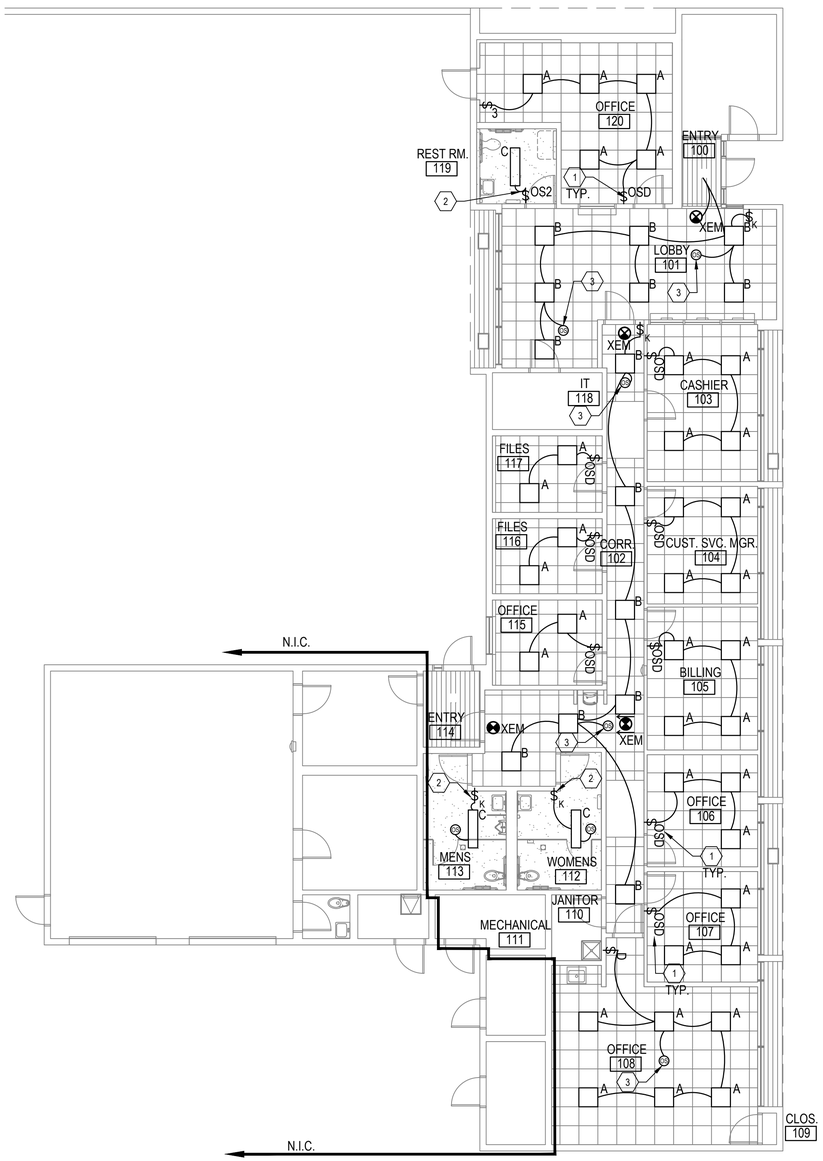

A3 ELECTRICAL LIGHTING PLAN
SCALE: 1/8"=1'-0"

0 4' 8' 16'
SCALE:1/8"=1'

FINAL

WHPacific
6501 Americas Pkwy NE, Suite 400
Albuquerque, NM 87110
505.247.0294 Fax 505.242.4845
www.whpacific.com

PHILLIP J. SITGES
NEW MEXICO
22284
PROFESSIONAL ENGINEER
10/8/18

REVISIONS & ADDENDUMS		
#	DATE	REMARKS

DRAWING INFO.	
DESIGNED	PJS
DRAWN	PJS
CHECKED	BF
APPROVED	
LAST EDIT	
PLOT DATE	
SUBMITTAL	6/29/18

ELECTRICAL LIGHTING PLAN

CITY OF LAS VEGAS, NEW MEXICO
UTILITIES OFFICE BUILDING RENOVATION - PHASE I

DRAWING SCALE: AS NOTED

PROJECT NUMBER: P0020657W.1
DRAWING FILE NAME: P0020657W.1-E-101.DWG

SHEET NUMBER
E-101

GENERAL NOTES

A. ALL RECEPTACLES AND DATA DROPS EXISTING TO REMAIN.
B. CONTRACTOR TO TRACE AND LABEL ALL EXISTING LOADS ON PANELS A, B, AND C.
C. INTERIOR CAMERAS LOCATIONS PROVIDED FOR BIDDING PURPOSES ONLY. CAMERAS AND EQUIPMENT PROVIDED BY SECURITY CONTRACTOR.

DEMOLITION KEYED NOTES (X)

1. REMOVE EXISTING PANEL C AND MOVE OVER TO NEW LOCATION SHOWN. CONTRACTOR TO CAPTURE ALL USED CIRCUITS AND EXTEND TO NEW PANEL LOCATION. DEMOLISH EXISTING TRANSFER SWITCH CABINET.
2. REMOVE ALL ELECTRICAL DEVICES IN HATCHED AREA BACK TO NEXT UPSTREAM DEVICE OR BACK TO PANEL AND MARK AS SPARE.
3. EXISTING EXHAUST FAN TO BE DEMOLISHED. REMOVE POWER BACK TO NEXT UPSTREAM DEVICE OR TO PANEL. REMOVE CONTROLS AND BLANK OFF BOX ON WALL.
4. RADIO EQUIPMENT, PLYWOOD BACKBOARD AND POWER FEEDING UNIT TO BE DEMOLISHED. REMOVE POWER CONDUCTORS AND CONDUIT BACK TO PANEL. REMOVE ALL APPURTENANCES SERVING RADIO EQUIPMENT IN ITS ENTIRETY.
5. CUT ALL CONDUITS FLUSH WITH FLOOR.
6. DEMOLISH ALL EXISTING PHONE EQUIPMENT AND COPPER FEEDER.
7. EXISTING RADIO ANTENNA AND CONDUCTORS TO BE REMOVED IN ITS ENTIRETY.
8. EXISTING MECHANICAL EQUIPMENT TO BE DEMOLISHED REMOVE DISCONNECT WIRING AND CONDUIT BACK TO PANEL OR NEAREST UPSTREAM DEVICE.
9. EXISTING AC EQUIPMENT LOCATED ON ROOF TO BE DEMOLISHED, REMOVE DISCONNECT, CONDUIT, CONTROLS AND WIRING BACK TO PANEL OR NEXT UPSTREAM DEVICE. CONTRACTOR TO DEMOLISH ALL CONTROLS WIRING AND CONTROLS, INSTALL BLANK FACEPLATE ON ABANDONED J-BOXES IN EXPOSED SPACES.
10. EXISTING EXHAUST FAN TO BE REMOVED AND REPLACED, DISCONNECT POWER AND RETAIN CIRCUIT FOR REUSE ON NEW EQUIPMENT.
11. DEMOLISH FLOOR MOUNTED RECEPTACLE AND DATA PORT, CUT CONDUITS FLUSH WITH FLOOR REMOVE WIRING BACK TO PANEL OR NEAREST UPSTREAM DEVICE.
12. PHONE EQUIPMENT TO BE DEMOLISHED. RETAIN PLYWOOD BACKBOARD.
13. WATER HEATER AND RECIRCULATION PUMP TO BE REPLACED, REMOVE POWER AND RETAIN CIRCUIT FOR REUSE ON NEW EQUIPMENT.

KEYED NOTES (X)

1. CONTRACTOR TO PROVIDE 20AMP MOTOR RATED SWITCH FOR DISCONNECTING MEANS OF HVAC EQUIPMENT.
2. CONTRACTOR TO PROVIDE BACKBOX AND CONDUIT FOR THERMOSTATS.
3. CONNECT POWER RETAINED DURING DEMOLITION TO NEW WATER HEATER AND RECIRCULATION PUMP.
4. PROVIDE 120V POWER FOR SECURITY DOOR KEY PAD.
5. PROVIDE SINGLE GANG BACKBOX, MUDRING, ONE 1" CONDUIT WITH NYLON BUSHING ON EITHER END TO 6" ABOVE CEILING OR NEAREST ACCESSIBLE CEILING PLENUM WITH NYLON PULL STRING FOR DATA DROP.
6. PROVIDE POWER TO HEAT PUMP HP-1 4-#4, 1#8 GROUND IN 1-1/4" C. DISCONNECT PROVIDED BY MECHANICAL.
7. PROVIDE POWER TO BASEBOARD HEATER 2#10, 1#10 GROUND IN 3/4" C.
8. PROVIDE POWER FOR CONDENSING UNIT CU1, 3#10, 1#10 GROUND IN 3/4" C. DISCONNECT PROVIDED BY MECHANICAL.
9. EXTERIOR CAMERA LOCATION PROVIDE 3/4" TO EXTERIOR CAMERA BOX, CAMERA BOX BY CAMERA PROVIDER. COORDINATE WITH SECURITY CONSULTANT.
10. CONNECT POWER RETAINED DURING DEMOLITION TO NEW EXHAUST FAN.
11. PROVIDE 240V, 30AMP, 2POLE DISCONNECT FOR UNIT HEATER., 2#10AWG, 1#10 GROUND, 3/4" CONDUIT.
12. KEYPAD FOR DOOR ENTRY, PROVIDE SINGLE GANG BOX, NYLON PULLSTRING, NYLON BUSHING ON EITHER END AND 3/4" CONDUIT TO NEAREST ACCESSIBLE CEILING PLENUM. COORDINATE WITH SECURITY CONSULTANT.
13. PROVIDE POWER FOR BRANCH SELECTORS BS-1, BS-2. PROVIDE 20AMP MOTOR RATED 2 POLE SWITCH FOR DISCONNECTING MEANS. PROVIDE 3#10, 1#10 GROUND, 3/4" CONDUIT.

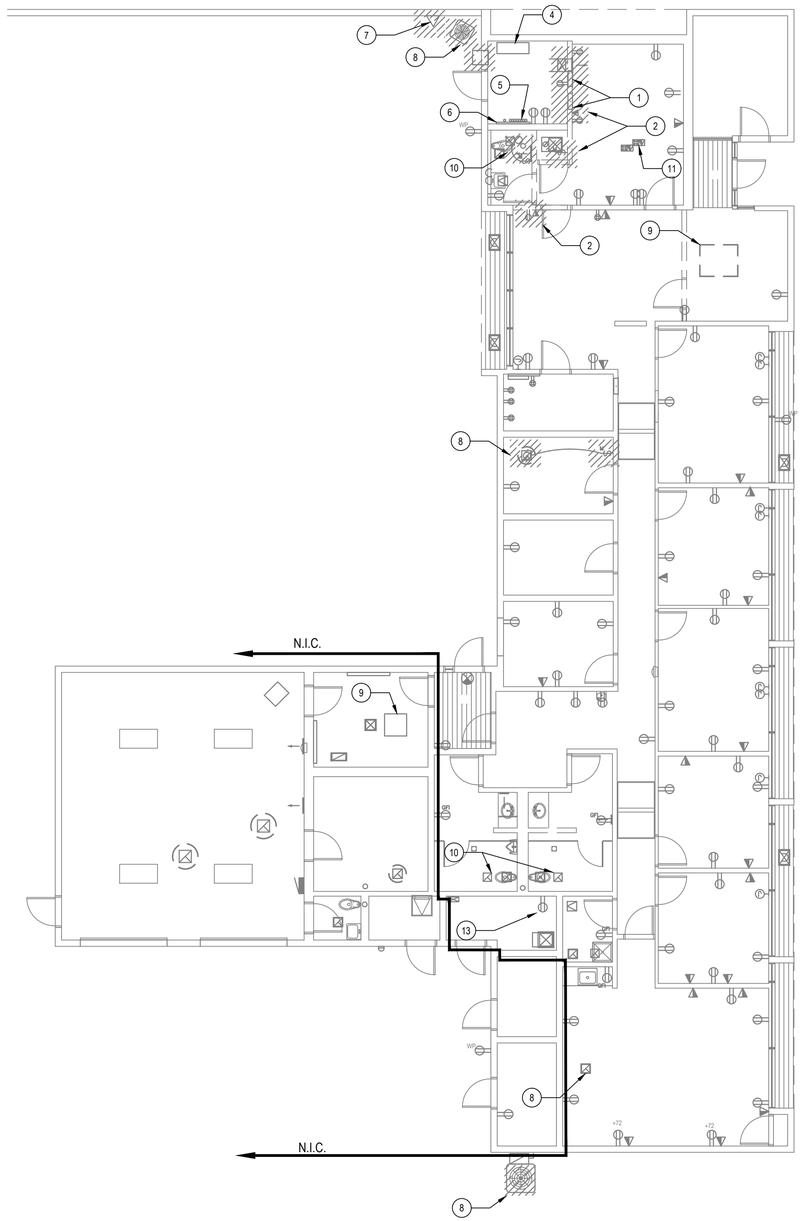

A1 ELECTRICAL POWER DEMOLITION PLAN
SCALE: 1/8"=1'-0"

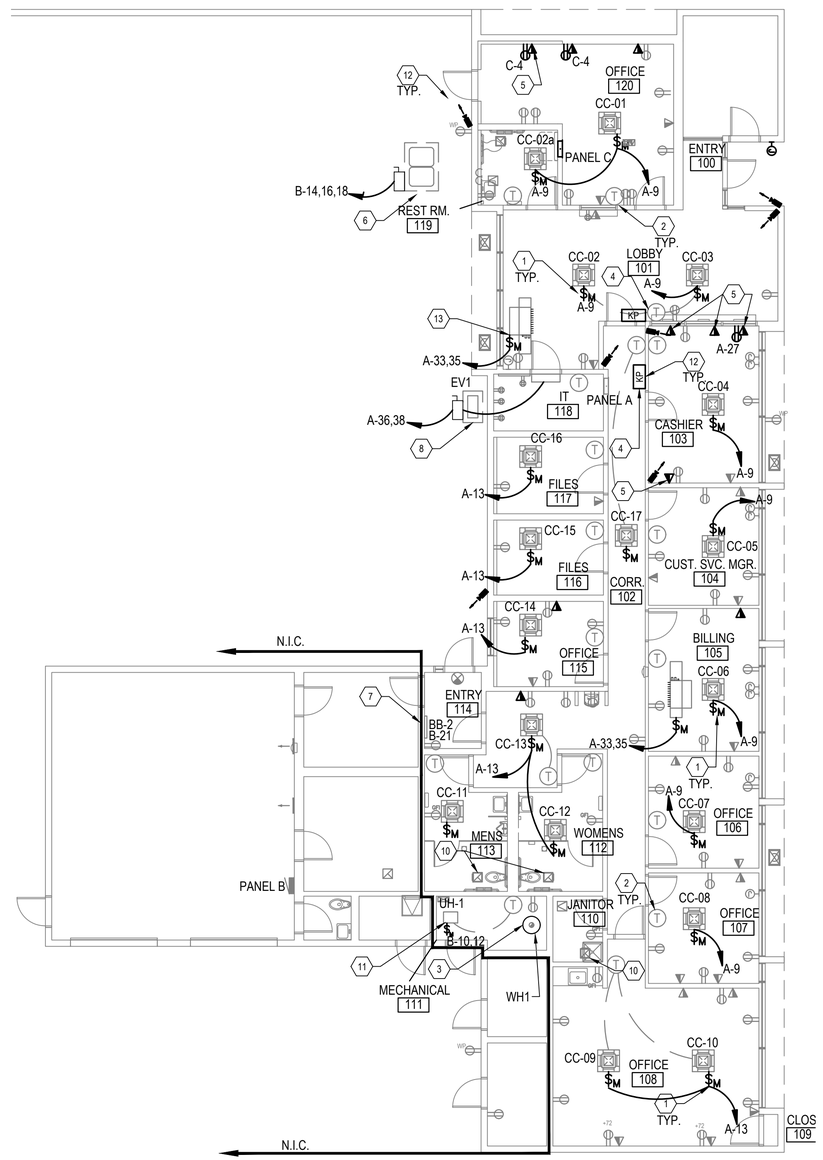

A3 ELECTRICAL POWER PLAN
SCALE: 1/8"=1'-0"

0 4' 8' 16'
SCALE:1/8"=1'

FINAL

WHPacific
6501 Americas Pkwy NE, Suite 400
Albuquerque, NM 87110
505.247.0294 Fax 505.242.4845
www.whpacific.com

PHILLIP J. SITGES NEW MEXICO 22284 PROFESSIONAL ENGINEER
10/8/18

REVISIONS & ADDENDUMS		
#	DATE	REMARKS

DRAWING INFO.	
DESIGNED	PJS
DRAWN	PJS
CHECKED	BF
APPROVED	
LAST EDIT	
PLOT DATE	
SUBMITTAL	6/29/18

ELECTRICAL POWER/SPEICAL SYSTEMS PLAN

CITY OF LAS VEGAS, NEW MEXICO
UTILITIES OFFICE BUILDING RENOVATION - PHASE I

DRAWING SCALE AS NOTED

PROJECT NUMBER P002065?W.1
DRAWING FILE NAME P002065?W.1-E-102.DWG

SHEET NUMBER
E-102

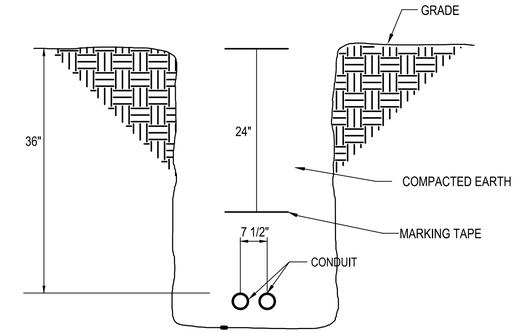

D4 TRENCH DETAIL
SCALE: NO SCALE

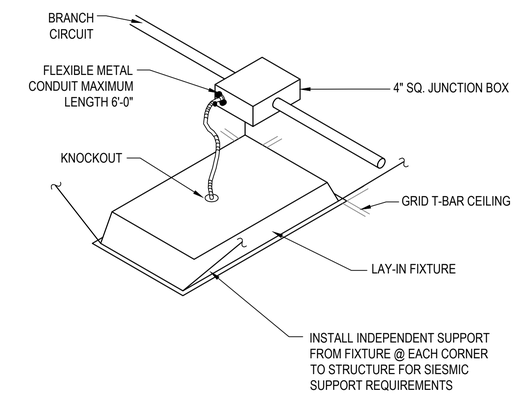

B4 LAY-IN FIXTURE DETAIL
SCALE: NO SCALE

FINAL

WHPacific
6501 Americas Pkwy NE, Suite 400
Albuquerque, NM 87110
505.247.0294 Fax 505.242.4845
www.whpacific.com

PHILLIP J. SITGES
NEW MEXICO
22284
PROFESSIONAL ENGINEER
10/8/18

REVISIONS & ADDENDUMS

#	DATE	REMARKS

DRAWING INFO.	
DESIGNED	PJS
DRAWN	PJS
CHECKED	PF
APPROVED	
LAST EDIT	
PLOT DATE	
SUBMITTAL	6/29/18

ELECTRICAL DETAILS

CITY OF LAS VEGAS, NEW MEXICO
UTILITIES OFFICE BUILDING RENOVATION - PHASE I

DRAWING SCALE
AS NOTED

PROJECT NUMBER
P0020657W.1

DRAWING FILE NAME
P0020657W.1-E-501.DWG

SHEET NUMBER
E-501

LIGHT FIXTURE SCHEDULE

TYPE	DESCRIPTION	LAMPS	VA	VOLTAGE	MANUFACTURER	REMARKS
A	2X2 RECESSED LED,ARCHITECTURAL TROFFER	LED, 4000K	21	120	H.E. WILLIAMS LED AT2-22-L20/830-D-DIM-UNV	RECESSED TROFFER 0-10% DIMMING
B	2X2 RECESSED LED,ARCHITECTURAL TROFFER	LED, 4000K	21	120	H.E. WILLIAMS LED AT2-22-L20/830-D-UNV	RECESSED TROFFER
C	SURFACE MOUNTED LED STRIP	LED, 4000K	25	120	H.E. WILLIAMS LED 39-4-L30-830-D-DIM-UNV	LINEAR STRIP LED
X1	WALL MOUNTED LED EXIT LIGHT, LED WITH TWO LED EM LIGHTS	LED	1	120	PHILIPS TRUPATH COMBO TPC TPC-D-N-U-R-W-ICT	COMBO EXIT/EM FIXTURE

Notes: 1. FIXTURE MANUFACTURER AND MODEL NUMBERS ARE BASIS OF DESIGN ONLY AND NOT A SOLE SOURCE.

GENERAL NOTES

A. ITEMS IN BOLD ON PANEL SCHEDULES ARE NEW LOADS.

LOAD CALCULATIONS		
SERVICE 400AMP, 120/208V, 3PH, 4W		
LOADS REMOVED	VA	AMPS
SWAMP COOLERS	960	
SPLIT SYSTEM 1	3972	
SPLIT SYSTEM 2	7113	
LIGHTING 42 X 110	4020	
EXHAUST FANS (2)	1056	
WATER HEATER/RECIRC PUMP	500	
RADIO EQUIPMENT	5824	
RECEPTACLES	540	
FURNACE	500	
TOTAL VA REMOVED	24485	67.97
ADDED LOADS	VA	AMPS
HP-1	19814	
EV1	2704	
CC1-17	1444	
UH-1	3016	
LIGHTING	1104	
RECEPTACLES	540	
BB-1	504	
BS-1-X	500	
CP-1	210	
EWC1	840	
WH-1/RCP-1	500	
TOTAL VA ADDED	31176	86.54
TOTAL AMPS ADDED		18.57

PANEL 'C'

VOLTAGE:	208Y/120V	**FRAME:**	100A	**MIN AIC RATING:**	10,000
PHASE:	3 PHASE	**MAINS:**	MLO	**CIRCUITS:**	26
WIRE:	4 WIRE	**ENCLOSURE:**	NEMA 1	**MOUNTING:**	SURFACE
FEED:	BOTTOM	**LOCATION:**	HALLWAY		

CKT NO	BKR RTNG	LOAD DESCRIPTION	VA	CONNECTED VA LOAD A	B	C	VA	LOAD DESCRIPTION	BKR RTNG	CKT NO
1	20A/1	EMERGENCY LIGHTS		0				REC RADIO RM	20A/1	2
3	35A/2	SPARE			360		360	**REC OFFICE 120**	20A/1	4
5						0		SPARE	30A/1	6
7	20A/1	SPARE		0				SPARE	20A/1	8
9	30A/1	REC OFF S. WALL			0			SPARE	20A/1	10
11	20A/1	REC FILE ROOM				0		SPARE	20A/1	12
CONNECTED LOAD (VA) PER PHASE				0	360	0	**360**	**TOTAL CONNECTED LOAD (VA)**		
							1.0	**TOTAL CONNECTED LOAD (AMPS)**		

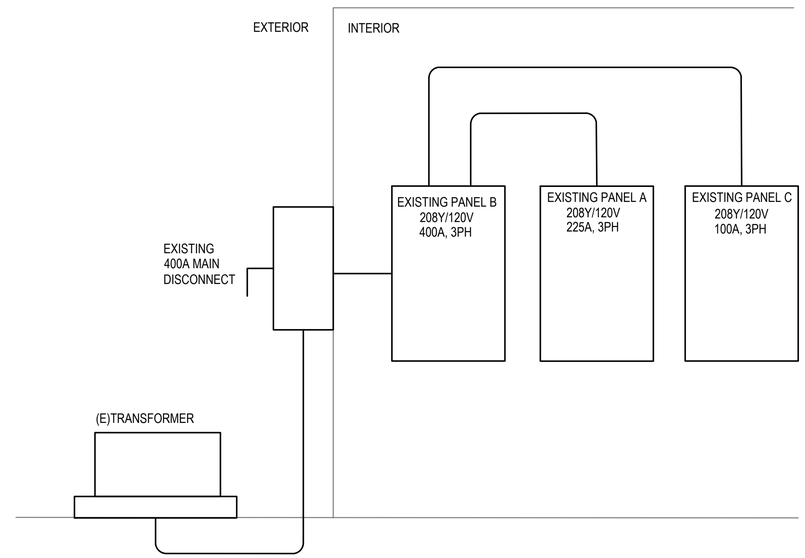

B4 ELECTRICAL RISER DIAGRAM
SCALE: N/A

PANEL 'B'

VOLTAGE:	208Y/120V	**FRAME:**	400A	**MIN AIC RATING:**	10,000
PHASE:	3 PHASE	**MAINS:**	MLO	**CIRCUITS:**	26
WIRE:	4 WIRE	**ENCLOSURE:**	NEMA 1	**MOUNTING:**	SURFACE
FEED:	BOTTOM	**LOCATION:**	HIGH BAY		

CKT NO	BKR RTNG	LOAD DESCRIPTION	VA	CONNECTED VA LOAD A	B	C	VA	LOAD DESCRIPTION	BKR RTNG	CKT NO
1	20A/1	SPACE		0				SPACE	20A/1	2
3	20A/1	LIGHTS			0			REC	20A/1	4
5	20A/1	REC				0		REC	20A/1	6
7	20A/1	REC		0				REC	20A/1	8
9	30A/1	SPARE			1508		1508	**UNIT HEATER UH-1**	**30A/2**	10
11	20A/1	SPARE				1508	1508			12
13	20A/1	SPARE		6604			6604	**HP-1**	**70A/3**	14
15	20A/1	SPARE			6604		6604			16
17	20A/1	EXHAUST FAN				6604	6604			18
19	20A/1	GARAGE HEATER(NOT USED)		0				BATH HEATER (NOT USED)	20A/1	20
21	**20A/1**	**BASEBOARD HEATER BB-1**	**504**		504			OFFICE HEATER(NOT USED)	20A/1	22
23	20A/1	MECH. EXHAUST FAN				0		OFFICE HEATER(NOT USED)	20A/1	24
25	35A/3	PANEL C		0				SPARE	30A/3	26
27					0					28
29						0				30
31				0						32
33					0					34
35						0				36
37				0				FEED TO PANEL A	200A/3	38
39					0					40
41						0				42
CONNECTED LOAD (VA) PER PHASE				6604	8616	8112	**23332**	**TOTAL CONNECTED LOAD (VA)**		
							64.8	**TOTAL CONNECTED LOAD (AMPS)**		

PANEL 'A'

VOLTAGE:	208Y/120V	**FRAME:**	225A	**MIN AIC RATING:**	10,000
PHASE:	3 PHASE	**MAINS:**	MLO	**CIRCUITS:**	26
WIRE:	4 WIRE	**ENCLOSURE:**	NEMA 1	**MOUNTING:**	SURFACE
FEED:	BOTTOM	**LOCATION:**	HALLWAY		

CKT NO	BKR RTNG	LOAD DESCRIPTION	VA	CONNECTED VA LOAD A	B	C	VA	LOAD DESCRIPTION	BKR RTNG	CKT NO
1	20A/1	LIGHTS. HALL		0				LIGHTS, EXT. STORAGE, BATHS	20A/1	2
3	20A/1	LIGHTS			0			LIGHTS	20A/1	4
5	20A/1	LIGHTS				0		LIGHTS, EXTERIOR	20A/1	6
7	20A/1	LIGHTS, EXTERIOR		0				REC	20A/1	8
9	30A/1	**CC-1/2/3/4/5/6/7/8**	772		772			REC, BATH/RADIO	20A/1	10
11	20A/1	LIGHTS				0		REC, LOBBY/RADIO	20A/1	12
13	20A/1	**CC-9/10/11/12/13/14/15/16**	672	672				WATER COOLER	20A/1	14
15	20A/1	REC			0			REC	20A/1	16
17	20A/1	REC				0		REC	20A/1	18
19	20A/1	REC		0				REC	20A/1	20
21	20A/1	REC, EXT STORAGE/BATH			0			REC	20A/1	22
23	20A/1	REC				0		REC	20A/1	24
25	20A/1	REC		0				**WATER HEATER/RECIRC PUMP**	30A/1	26
27	30A/1	**REC CASHIER 103**	180		180			BATH VENT FANS	20A/1	28
29	20A/1	SPARE				0		REC	20A/1	30
31	20A/1	SPARE		0				IT ROOM PLUG	20A/2	32
33	**15A/2P**	**EV-1 SPLIT SYSTEM**	1352		1352					34
35			1352			1601	249	**BS-1, BS-2**	20A/2P	36
37	20A/1	SPARE		249			249			38
39	20A/1	COMMUNICATION ROCK PLUGS			0			REC	20A/1	40
41		SPACE				0		EXIST LOAD	20A/1	42
CONNECTED LOAD (VA) PER PHASE				921	2304	1601	**4826**	**TOTAL CONNECTED LOAD (VA)**		
							13.4	**TOTAL CONNECTED LOAD (AMPS)**		

FINAL

WHPacific
6501 Americas Pkwy NE, Suite 400
Albuquerque, NM 87110
505.247.0294 Fax 505.242.4845
www.whpacific.com

PHILLIP J. SITGES
NEW MEXICO
22284
PROFESSIONAL ENGINEER
10/8/18

REVISIONS & ADDENDUMS		
#	DATE	REMARKS

DRAWING INFO.		
DESIGNED	PJS	
DRAWN	PJS	
CHECKED	BF	
APPROVED		
LAST EDIT		
PLOT DATE		
SUBMITTAL	6/29/18	

ELECTRICAL DIAGRAMS & SCHEDULES

CITY OF LAS VEGAS, NEW MEXICO
UTILITIES OFFICE BUILDING RENOVATION - PHASE I

DRAWING SCALE: AS NOTED

PROJECT NUMBER: P0020657W.1
DRAWING FILE NAME: P0020657W.1-E-601.DWG

SHEET NUMBER
E-601